# Instructions for the use - Installation advices

## COOKER
# 120 DX 634 “ZA”

100% ELBA QUALITY
MADE IN ITALY

ELBA
HOME APPLIANCES

Made in Italy

***Dear Customer,***

*Thank you for having purchased and given your preference to our product.*

*The safety precautions and recommendations reported below are for your own safety and that of others. They will also provide a means by which to make full use of the features offered by your appliance.*

*Please preserve this booklet carefully. It may be useful in future, either to yourself or to others in the event that doubts should arise relating to its operation.*

***This appliance must be used only for the task it has explicitly been designed for, that is for cooking foodstuffs. Any other form of usage is to be considered as inappropriate and therefore dangerous.***

***The manufacturer declines all responsibility in the event of damage caused by improper, incorrect or illogical use of the appliance.***

## IMPORTANT SAFETY PRECAUTIONS AND RECOMMENDATIONS

**IMPORTANT: This appliance is designed and manufactured solely for the cooking of domestic (household) food and is not suitable for any non domestic application and therefore should not be used in a commercial environment.**
**The appliance guarantee will be void if the appliance is used within a non domestic environment i.e. a semi commercial, commercial or communal environment.**

**Read the instructions carefully before installing and using the appliance.**

- After having unpacked the appliance, check to ensure that it is not damaged and that the oven door closes correctly.
  In case of doubt, do not use it and consult your supplier or a professionally qualified technician.
- Packing elements (i.e. plastic bags, polystyrene foam, nails, packing straps, etc.) should not be left around within easy reach of children, as these may cause serious injuries.
- Some appliances are supplied with a protective film on steel and aluminium parts. **This film must be removed before using the appliance.**
- IMPORTANT: The use of suitable protective clothing/gloves is recommended when handling or cleaning this appliance.
- Do not attempt to modify the technical characteristics of the appliance as this may become dangerous to use. The manufacturer declines all responsibility for any inconvenience resulting from the inobservance of this condition.
- CAUTION: this appliance must only be installed in a permanently ventilated room in compliance with the applicable regulations.
- Do not operate your appliance by means of an external timer or separate remote-control system.
- Do not carry out cleaning or maintenance operations on the appliance without having previously disconnected it from the electric power supply.

- WARNING: Ensure that the appliance is switched off before replacing the oven lamp to avoid the possibility of electric shock.
- Do not use a steam cleaner because the moisture can get into the appliance thus make it unsafe.
- Do not touch the appliance with wet or damp hands (or feet).
- Do not use the appliance whilst in barefoot.
- If you should decide not to use this appliance any longer (or decide to substitute another model), before disposing of it, it is recommended that it be made inoperative in an appropriate manner in accordance to health and environmental protection regulations, ensuring in particular that all potentially hazardous parts be made harmless, especially in relation to children who could play with unused appliances.
- The various components of the appliance are recyclable. Dispose of them in accordance with the regulations in force in your country. If the appliance is to be scrapped, remove the power cord.
- After use, ensure that the knobs are in the off position.
- Children less than 8 years of age shall be kept away unless continuously supervised.
- This appliance can be used by children aged from 8 years and above and persons with reduced physical, sensory or mental capabilities or lack of experience and knowledge if they have been given supervision or instruction concerning use of the appliance in a safe way and understand the hazards involved. Children shall not play with the appliance. Cleaning and user maintenance shall not be made by children without supervision.
- The manufacturer declines all liability for injury to persons or damage to property caused by incorrect or improper use of the appliance.
- WARNING: During use the appliance and its accessible parts become hot; they remain hot for some time after use.
  - Care should be taken to avoid touching heating elements (on the hob and inside the oven).
  - The door is hot, use the handle.

- To avoid burns and scalds, young children should be kept away.

- Make sure that electrical cables connecting other appliances in the proximity of the cooker cannot come into contact with the hob or become entrapped in the oven door.
- WARNING: Unattended cooking on a hob with fat or oil can be dangerous and may result in fire. NEVER try to extinguish a fire with water, but switch off the appliance and then cover flame e.g. with a lid or a fire blanket.
- WARNING: Danger of fire: do not store items on the cooking surfaces.
- Do not place or leave empty pans on the glass ceramic hob.
- Do not allow heavy or sharp objects to drop on the glass ceramic hob.
- Do not scratch the hob with sharp objects. Don't use the hob as a work surface.
- WARNING: If the hob is cracked or otherwise damaged by falling objects etc., disconnect the appliance from the electrical power supply to avoid the possibility of electric shock and call Customer Service.
- WARNING: When correctly installed, your product meets all safety requirements laid down for this type of product category. However special care should be taken around the rear or the underneath of the appliance as these areas are not designed or intended to be touched and may contain sharp or rough edges, that may cause injury.
- FIRST USE OF THE OVEN - it is advised to follow these instructions:
  - Furnish the interior of the oven as described in the chapter "CLEANING AND MAINTENANCE".
  - Switch on the empty oven on max to eliminate grease from the heating elements.
  - Disconnect the appliance from the electrical power supply, let the oven cool down and clean the interior of the oven with a cloth soaked in water and neutral detergent; then dry carefully.

- CAUTION: Do not use harsh abrasive cleaners or sharp metal scrapers to clean the oven door glass since they can scratch the surface, which may result in shattering of the glass.
- Do not line the oven walls with aluminium foil. Do not place baking trays or the drip tray on the base of the oven chamber.
- FIRE RISK! Do not store flammable material in the oven or in the storage compartment.
- Always use oven gloves when removing the shelves and food trays from the oven whilst hot.
- Do not hang towels, dishcloths or other items on the appliance or its handle – as this could be a fire hazard.
- Clean the oven regularly and do not allow fat or oils to build up in the oven base or tray. Remove spillages as soon as they occur.
- Do not stand on the cooker or on the open oven door.
- Always stand back from the appliance when opening the oven door to allow steam and hot air to escape before removing the food.
- SAFE FOOD HANDLING: Leave food in the oven for as short a time as possible before and after cooking. This is to avoid contamination by organisms which may cause food poisoning. Take particular care during warmer weather.
- WARNING: Take care NOT to lift the cooker by the door handle.

# 1 COOKING HOB - CONTROL PANEL

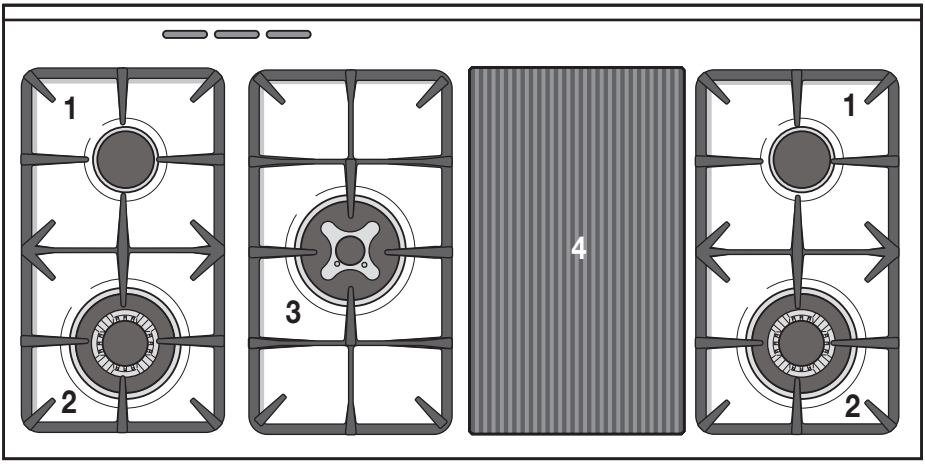


*Fig. 1.1*

## TECHNICAL FEATURES - Cooking hob

| | | |
|---|---|---|
| 1. | Semi-rapid burner (SR) | 1,75 kW |
| 2. | Triple-ring burner (TC) | 3,50 kW |
| 3. | Dual burner (D) | 4,50 kW |
| 4. | Ceramic griddle | 1300 W |

**Note:**
The electric ignition is incorporated in the knobs.

The appliance has a safety valve system fitted, the flow of gas will be stopped if and when the flame should accidentally go out.

**Attention:** Do not use the ceramic griddle if the glass surface is broken or cracked in any way. Please disconnect the hob from the mains and contact the after-sales service.

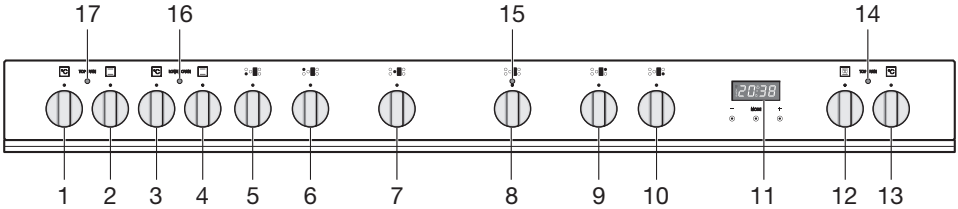

*Fig. 1.2*

## CONTROL PANEL - Controls description

1. Conventional oven thermostat knob (Top left oven)
2. Conventional oven switch knob (Top left oven)
3. Fan oven thermostat knob (Lower left oven)
4. Fan oven switch knob (Lower left oven)
5. Front left triple-ring burner control knob
6. Rear left semi-rapid burner control knob
7. Central dual burner control knob
8. Ceramic griddle control knob
9. Rear right semi-rapid burner control knob
10. Front right triple-ring burner control knob
11. Clock and timer with “Touch-Control” keys (Right main oven only)
12. Multifunction oven switch knob (Right main oven)
13. Multifunction oven thermostat knob (Right main oven)
14. Indicator light (Right main oven)
15. Ceramic griddle control lamp
16. Indicator light (Lower left oven)
17. Indicator light (Top left oven)

**Please note:** This appliance incorporates no. 2 (two) safety cooling fans which you will hear operating whenever the oven or grill are in use. The cooling fans may also operate when the oven is switched off. These fans are to reduce the external temperature of the appliance and cool the internal components.

## GAS BURNERS
## (Semi-rapid and triple ring)

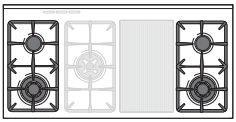

Gas flow to the burners is adjusted by turning the knobs (illustrated in fig. 2.1) which control the valves.
Turning the knob so that the symbols printed on itself point to the symbol printed on the control panel achieves the following functions:

The maximum aperture position permits rapid boiling of liquids, whereas the minimum aperture position allows simmer warming of food or maintaining boiling conditions of liquids.

To reduce the gas flow to minimum, rotate the knob further anti-clockwise to point the indicator towards the 💧 position.

Other intermediate operating adjustments can be achieved by positioning the indicator between the maximum and minimum aperture positions, and never between the maximum aperture and ● positions.

| Knob position | Function | SEMI-RAPID burner | TRIPLE RING burner |
|---|---|---|---|
| ● | Closed valve | 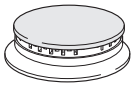 | 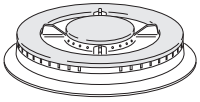 |
| ★💧 | Maximum rate |  |  |
| 💧 | Minimum rate | 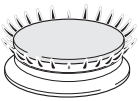 | 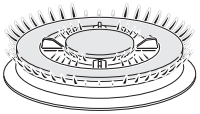 |

# LIGHTING GAS BURNERS FITTED WITH SAFETY VALVE DEVICE (Semi-rapid and triple-ring burners)

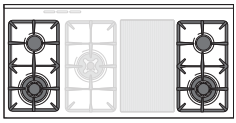

In order to light the burner, you must:

1 – Push and turn the knob in an anti-clockwise direction up to the ★ position (maximum rate), push in and hold the knob until the flame has been lit (fig. 2.2).

The sparks produced by the lighter situated inside the relative burner will light the flame.
In the event that the local gas supply conditions makes it difficult to light the burner in ★ position, try again with the knob in position.

If there is no main electrical supply, bring a lighted match close to the burner.

2 – Wait for about ten seconds after the gas burner has been lit before letting go the knob (safety device activation delay).

3 – Adjust the gas valve to the desired position.

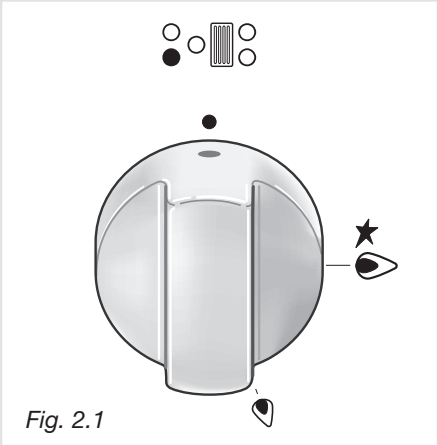

*Fig. 2.1*

If the burner flame should go out for some reason, the safety valve will automatically stop the gas flow.
To re-light the burner, return the knob to the closed ● position, **wait for at least 1 minute** and then repeat the lighting procedure.

If your local gas supply makes it difficult to light the burner with the knob set to maximum, set the knob to minimum and repeat the operation.

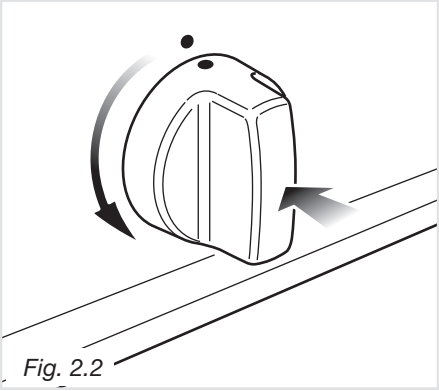

*Fig. 2.2*

**N.B. When the cooker top is not being used, set the gas knobs to their closed positions and also close the cock valve on the gas bottle or the main gas supply line.**

**Caution!**
**The cooker becomes very hot during operation.**
**Keep children well out of reach.**

## GAS BURNERS (Dual)

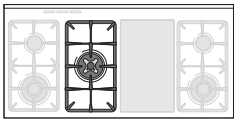

The Dual Burner is a very flexible burner which allows different regulations and optimal cooking.

It is composed by one inner and two outer crowns; the flame of the inner crown can be regulated separately from the flames of the outer crowns.

The Dual Burner can be used:

- as a small burner (flame produced only by the inner crown) which can be adjusted from the maximum ( ) to the minimum ( ) position.

  Intermediate operating adjustments can be achieved by positioning the indicator between the maximum and minimum opening positions, and never between the maximum opening and ● position.

- as a high-power burner (all flames produced simultaneously by inner and outer crowns) which can be adjusted from the maximum ( ) to the minimum ( ) position.

Gas flow to the burner is adjusted by turning the knob (illustrated in fig. 3.3) which controls the valves.

Turning the knob so that the symbols printed on itself point to the symbol printed on the control panel achieves the following functions:

**Note**: To change from using the inner crown only to using both the inner and outer crowns together, press the control knob down before turning it. You have to do the same when going from using both crowns to using just the inner crown.

| Knob position | Function | DUAL burner |
|---|---|---|
| ● | Closed valve | |
| ★ | Maximum rate of inner crown (only inner flame at the maximum | |
| | Minimum rate of inner crown (only inner flame at the minimum) | |
| | Maximum rate of inner + outer crowns (inside and outside flames in simultaneously at the maximum) | |
| | Minimum rate of inner + outer crowns (inside and outside flames in simultaneously at the minimum) | |

# LIGHTING GAS BURNERS FITTED WITH SAFETY VALVE DEVICE (Dual Burners)

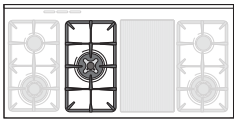

In order to light the burner, you must:

1 – Push and turn the knob in an anti-clockwise direction up to the ★ position (maximum rate of inner crown); push in and hold the knob until the flame has been lit.

The sparks produced by the lighter situated inside the relative burner will light the flame.

In the event that the local gas supply conditions makes it difficult to light the burner in ★ position, try again with the knob in position.

If there is no main electrical supply connection, bring a lighted match close to the burner.

2 – Wait for about ten seconds after the gas burner has been lit before letting go the knob (safety device activation delay).

3 – Adjust the gas valve to the desired position.

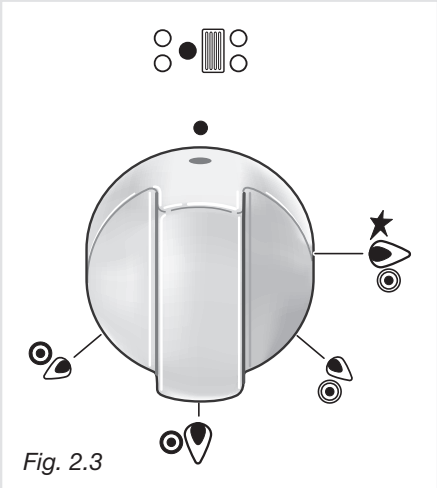

*Fig. 2.3*

If the burner flame should go out for some reason, the safety valve will automatically stop the gas flow.
To re-light the burner, return the knob to the closed position (●), **wait for at least 1 minute** and then repeat the lighting procedure.

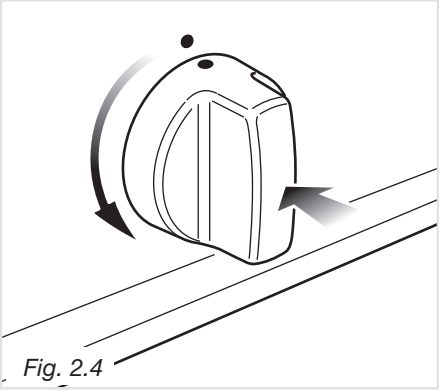

*Fig. 2.4*

**N.B. When the cooker top is not being used, set the gas knobs to their closed positions and also close the cock valve on the gas bottle or the main gas supply line.**

**Caution!**
**The cooker becomes very hot during operation.**
**Keep children well out of reach.**

## CHOICE OF BURNER

(fig. 2.5)

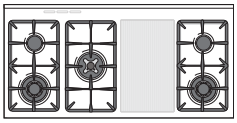

The symbols printed on the panel beside the gas knobs indicate the correspondence between the knob and the burner.
The most suitable burner is to be chosen according to the diameter and volume capacity of the container to be warmed.
It is important that the diameter of the pots or pans suitably match the heating potential of the burners in order not to jeopardise the efficiency of the burners, bringing about a waste of gas fuel.
A small diameter pot or pan placed on a large burner does not necessarily mean that boiling conditions are reached quicker.

**DIAMETERS OF PANS WHICH MAY BE USED ON THE HOB BURNERS**

| BURNERS | MINIMUM | MAX. |
|---|---|---|
| Semirapid | 16 cm | 24 cm |
| Triple-ring | 26 cm | 28 cm |
| Dual | 26 cm | 28 cm |
| Maximum diameter for woks: 36 cm | | |

**do not use pans with concave or convex bases**

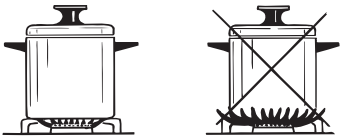

*Fig. 2.5*

## CORRECT USE OF TRIPLE-RING BURNERS (Figs. 2.6a - 2.6b)

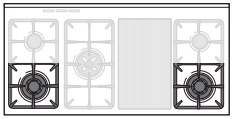

The flat-bottomed pans are to be placed directly onto the pan-support.
To use the WOK you need to place the proper stand in order to avoid any faulty operation of the triple-ring (figs. 2.6a - 2.6b).

**Important:** The wok pan stand (figs. 2.6a - 2.6b) **MUST BE PLACED ONLY** over the pan-rest for the triple-ring burner.

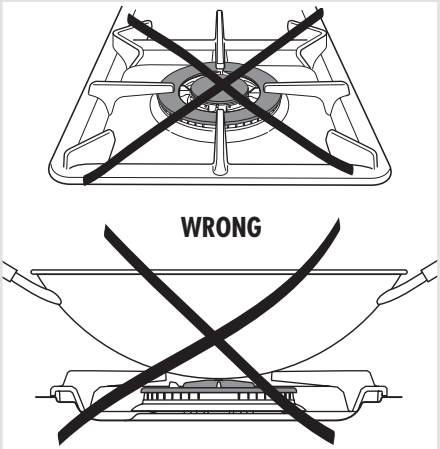


*Fig. 2.6a*

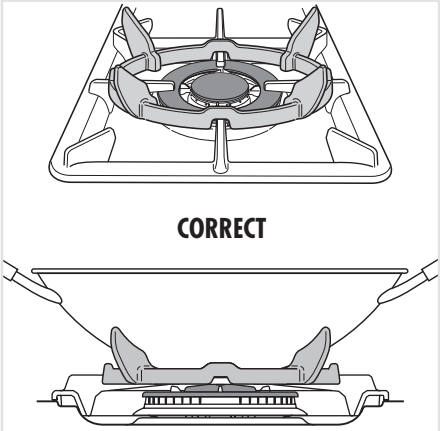


*Fig. 2.6b*

# CERAMIC GRIDDLE

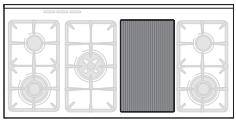

The griddle reaches the working temperature very quickly and can grill any food, without fat and oil, directly on the radiant zone's glass-ceramic surface.

Operation of the radiant zone is controlled by a continuous
12-position power regulator.

The signal lamp lights up when the griddle is ON.

## USING THE CERAMIC GRIDDLE FOR THE FIRST TIME

- Remove the adhesive film which protects some parts.
- Remove any residual glue carefully, without using abrasive substances, to avoid scratching the surfaces.
- Clean the cooking surface carefully.
- Switch the griddle on by turning the power setting knob to the maximum position (11-12) for about 15 minutes to remove residual working greases.

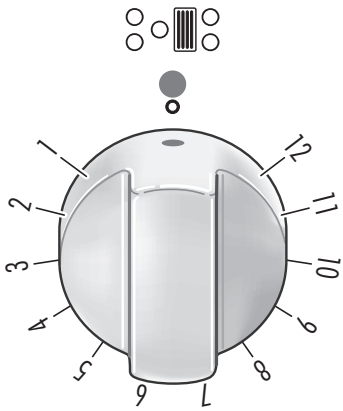


*Fig. 2.7*

## USE OF THE CERAMIC GRIDDLE

- Before cooking make sure that the radiant zone is clean.
- Switch the griddle on by turning the knob to position 12.
- Preheat until the cooking surface becomes red.
- Then turn the knob to the position required. The numbers from 1 to 12 indicate the working positions with temperature increasing as the number increases.
- Place the food on the radiant zone and check the cooking by eye.
- Turn off the griddle by turning the knob to position "O".
- As the radiant zone remains hot for some time after the hob is switched off, turn the zone off a few minutes before the end of cooking.

  The residual heat will complete the cooking.
- **Do not use the griddle for more than 30 minutes.**

**Caution!**
**The griddle becomes very hot during use and remains very hot even after it is switched off.**
**Keep children well out of reach.**

## TIPS FOR GRILLING:

- Preheat the radiant zone sufficiently to obtain quick and uniform cooking.
- Do not pour water on the cooking surface when it is switched on or still hot.
- If cooking very fatty foods, leave the griddle switched on for a few minutes after cooking is finished, to burn off the fatty residues.

## ADVICE FOR THE SAFE USE OF CERAMIC GRIDDLE

- Do not lean on the cooking zones when they are switched on.
- Do not put aluminium foil or plastic objects on the cooking zones when they are hot.
- Do not leave objects of any type on the surfaces made of ceramic, glass or similar fragile material.
- Remember that the cooking zones remain hot for some time after they are switched off (about 30 min.).
- Follow the cleaning instructions carefully.
- If you note a crack in the cooktop, switch the appliance off immediately and call the After-Sales Service.

**Do not scratch the cooktop with cutting or sharp objects.**
**Do not use the cooktop as a work surface.**

## CLEANING THE CERAMIC GRIDDLE

Make sure that the cooktop is switched off before cleaning it.

- Remove any encrustation.
- Remove dust with a damp cloth.
- Detergents can be used, but they must not be abrasive or corrosive.
- Any remaining detergent must be completely removed with a damp cloth.
- Do not put any objects on the cooktop which can melt with heat, such as plastic objects, aluminium foil, sugar or sugar products.
- If any object melts on the cooktop, remove it immediately (while the cooktop is still hot) using a special scraper, to prevent any irreversible damage to the glass ceramic surface.
- Do not use knives or sharp objects which could damage the cooktop surface.
- Do not use abrasive sponges or pads which could irreversibly damage the glass ceramic surface.

**CAUTION: Never use abrasive substances or no-neutral detergent which could irreversibly damages.**

# 3 MULTIFUNCTION ELECTRIC OVEN (Right oven)

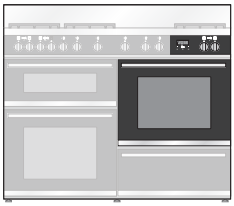

**WARNING:**
**The door is hot, use the handle.**

**During use the appliance becomes hot. Care should be taken to avoid touching heating elements inside the oven.**

**Attention: the oven door becomes very hot during operation.**
**Keep children away**

## GENERAL FEATURES

As its name indicates, this is an oven that presents particular features from an operational point of view.

In fact, it is possible to insert 7 different programs to satisfy every cooking need. The 7 positions, thermostatically controlled, are obtained by 4 heating elements which are:

| | |
|---|---|
| – Bottom element | 1300 W |
| – Top element | 1000 W |
| – Grill element | 2000 W |
| – Circular element | 2200 W |

**NOTE:**
Upon first use, it is advisable to operate the oven for 30 minutes in the position ▭ and for another 15 minutes at the maximum temperature (thermostat knob on position 250) in the positions ⊛ and ⊠, to eliminate possible traces of grease on the heating elements.
Clean the oven and accessories with warm water and washing-up liquid.

## OPERATING PRINCIPLES

Heating and cooking in the MULTI-FUNCTION oven are obtained in the following ways:

**a. by normal convection**
The heat is produced by the upper and lower heating elements.

**b. by forced convection**
A fan sucks in the air contained in the oven muffle, which sends it through the circular heating element and then sends it back through the muffle. Before the hot air is sucked back again by the fan to repeat the described cycle, it envelops the food in the oven, provoking a complete and rapid cooking.
It is possible to cook several dishes simultaneously.

**c. by semi-forced convection**
The heat produced by the upper and lower heating elements is distributed throughout the oven by the fan.

**d. by radiation**
The heat is irradiated by the infra red grill element.

**e. by radiation and ventilation**
The irradiated heat from the infra red grill element is distributed throughout the oven by the fan.

**f. by ventilation**
The food is defrosted by using the fan only function without heat.

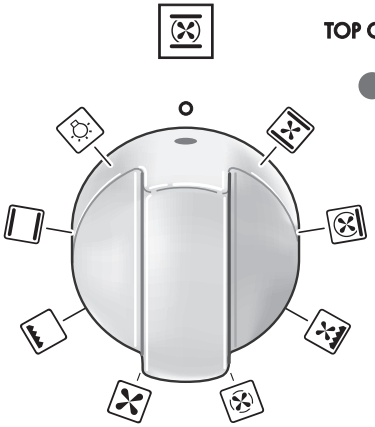

Fig. 3.1

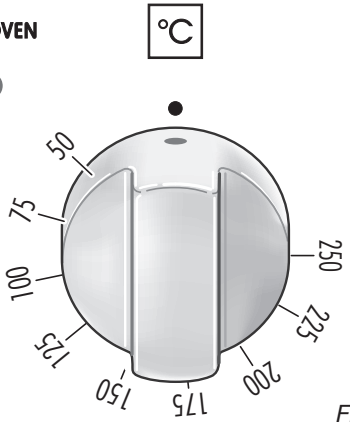


Fig. 3.2

## THERMOSTAT (fig. 3.1)

This only sets the cooking temperature and does not switch the oven on.
Rotate clockwise until the required temperature is reached (from 50 to 250).

## FUNCTION SELECTOR KNOB (fig. 3.2)

Rotate the knob clockwise to set the oven for one of the following functions:

### OVEN LIGHT

By turning the knob onto this setting we light the oven cavity.
The oven remains alight while any of the functions is on.

### TRADITIONAL CONVECTION COOKING

The upper and lower heating elements are switched on. The heat is diffused by natural convection and the temperature must be regulated between 50° C and 250° C with the thermostat knob.
It is necessary to preheat the oven before introducing the foods to be cooked.

***Recommended for:***
For foods which require the same cooking temperature both internally and externally, i. e. roasts, spare ribs, meringue, etc.

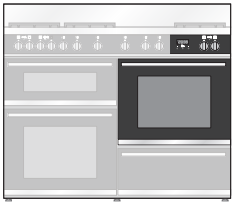

## GRILLING

The infra-red heating element is switched on. The heat is diffused by radiation.
Use with the function selector knob to position and the thermostat knob **between 50°C and 225°C maximum** and with the **oven door closed**.

For correct use see chapter “USE OF THE GRILL”

Before using the grill, preheat for about five minutes.
**Always grill with the oven door closed and do not use the grill for longer than 30 minutes at any one time.**

**Caution: The oven door becomes very hot during operation.**
**Keep children well out of reach.**

***Recommended for:***
Intense grilling action for cooking with a broiler; browning, crisping, “au gratin”, toasting, etc.

## DEFROSTING FROZEN FOODS

Only the oven fan is on. To be used with the thermostat knob on “●” because the other positions have no effect. The defrosting is done by simple ventilation without heat.

***Recommended for:***
To rapidly defrost frozen foods; 1 kilogram requires about one hour.
The defrosting times vary according to the quantity and type of foods to be defrosted.

## HOT AIR COOKING

The circular element and the fan are on. The heat is diffused by forced convection and the temperature must be regulated between 50° and 250 °C with the thermostat knob.
It is not necessary to preheat the oven.

***Recommended for:***
For foods that must be well done on the outside and tender or rare on the inside, i. e. lasagna, lamb, roast beef, whole fish, etc.

## VENTILATED GRILL COOKING

The infra-red ray grill and the fan are on.
The heat is mainly diffused by radiation and the fan then distributes it throughout the oven.
The temperature must be regulated **between 50° and 200°C maximum** with the thermostat knob. It is necessary to preheat the oven for about 5 minutes.
For correct use see chapter “GRILLING AND AU GRATIN.

**Grilling with the oven door closed.**
**It is recommended that you do not grill for longer than 30 minutes at any one time.**

**ATTENTION: the oven door becomes very hot during operation.**
**Keep children away.**

***Recommended for:***
For grill cooking when a fast outside browning is necessary to keep the juices in, i. e. veal steak, steak, hamburger, etc.

### THAWING AND WARMING UP

The upper element and the circular element connected in series, are switched on; also the fan is on. The heat is diffused by forced convection with the most heat being produced by the upper element.
The temperature must be regulated between 50° and 140 °C with the thermostat knob.

***Recommended for:***
To keep foods hot after cooking. To slowly heat already cooked foods.

### CONVECTION COOKING WITH VENTILATION

The upper and lower heating elements and the fan turn on.
The heat coming from the top and bottom is diffused by forced convection.
The temperature must be regulated between 50° and 250 °C with the thermostat knob.

***Recommended for:***
For foods of large volume and quantity which require the same internal and external degree of cooking; for ie: rolled roasts, turkey, legs, cakes, etc.

**The external parts of the oven become hot during operation.**

**Keep children well out of reach.**

# COOKING ADVICE

## STERILIZATION

Sterilization of foods to be conserved, in full and hermetically sealed jars, is done in the following way:

**a.** Set the switch to position .

**b.** Set the thermostat knob to position 185 °C and preheat the oven.

**c.** Fill the dripping pan with hot water.

**d.** Set the jars onto the dripping pan making sure they do not touch each other and the door and set the thermostat knob to position 135 °C.

When sterilization has begun, that is, when the contents of the jars start to bubble, turn off the oven and let cool.

## REGENERATION

Set the switch to position and the thermostat knob to position 150° C.
Bread becomes fragrant again if wet with a few drops of water and put into the oven for about 10 minutes at the highest temperature.

## ROASTING

To obtain classical roasting, it is necessary to remember:
– that it is advisable to maintain a temperature between 180 and 200 °C.
– that the cooking time depends on the quantity and the type of foods.

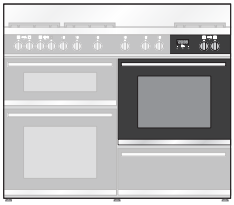

## SIMULTANEOUS COOKING OF DIFFERENT FOODS

The MULTI-FUNCTION oven set on position and gives simultaneous heterogeneous cooking of different foods.
Different foods such as fish, cake and meat can be cooked together without mixing the smells and flavours.
This is possible since the fats and vapours are oxidized while passing through the electrical element and therefore are not deposited onto the foods.

The only precautions to follow are:
– The cooking temperatures of the different foods must be as close to as possible, with a maximum difference of 20° - 25 °C.
– The introduction of the different dishes in the oven must be done at different times in relation to the cooking times of each one.

The time and energy saved with this type of cooking is obvious.

## GRILLING AND "AU GRATIN"

Grilling may be done by selecting grill+fan setting with the function selector knob, because the hot air completely envelops the food that is to be cooked.
Set the thermostat knob **between 50°C and 200°C maximum** and after having preheated the oven, simply place the food on the grid.
**Close the door** and let the oven operate until grilling is done.

Adding a few dabs of butter before the end of the cooking time gives the golden "au gratin" effect.

**Grilling with the oven door closed.**
**It is recommended that you do not grill for longer than 30 minutes at any one time.**

**Attention: the oven door becomes very hot during operation.**
**Keep children away.**

## USE OF THE GRILL

Set the function selector knob to position and the thermostat knob **between 50°C and 225°C maximum**.
Leave to warm up for approximately 5 minutes **with the door closed**.

Introduce the food to be cooked, positioning the grill pan as close to the grill as possible.

Insert the drip pan under the rack to collect the cooking juices.

**Always grill with the oven door closed.**

**Grilling with the oven door closed and not for longer than 30 minutes at any one time.**

**Attention: the oven door becomes very hot during operation.**
**Keep children away.**

## OVEN COOKING

Before introducing the food, preheat the oven to the desired temperature.
For a correct preheating operation, it is advisable to remove the tray from the oven and introduce it together with the food, when the oven has reached the desired temperature.
Check the cooking time and turn off the oven 5 minutes before the theoretical time to recuperate the stored heat.

# 4 CONVECTION OVEN (Bottom left oven)

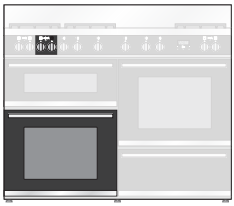

**The glass on the oven door reaches high temperatures during operation.**
**Keep children away.**

## GENERAL FEATURES

The convection oven is equipped with 3 electrical heating elements:

– 2 elements (upper and lower) for normal oven cooking

– 1 grill element, on the top of the oven, for grilling which must be done with the oven door closed.

The input of the elements is:

| | |
|---|---|
| – Upper element, | 1000 W |
| – Lower element, | 1300 W |
| – Grill element, | 2000 W |

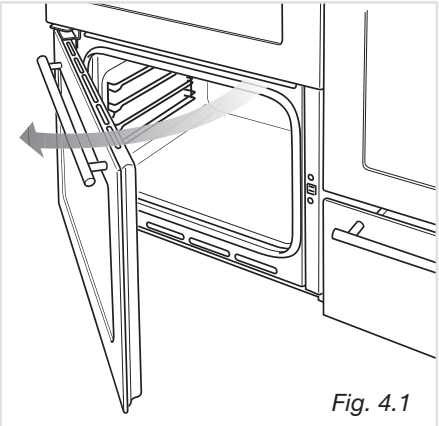

*Fig. 4.1*

**IMPORTANT**
To open the bottom left door operate as indicated in fig. 4.1.

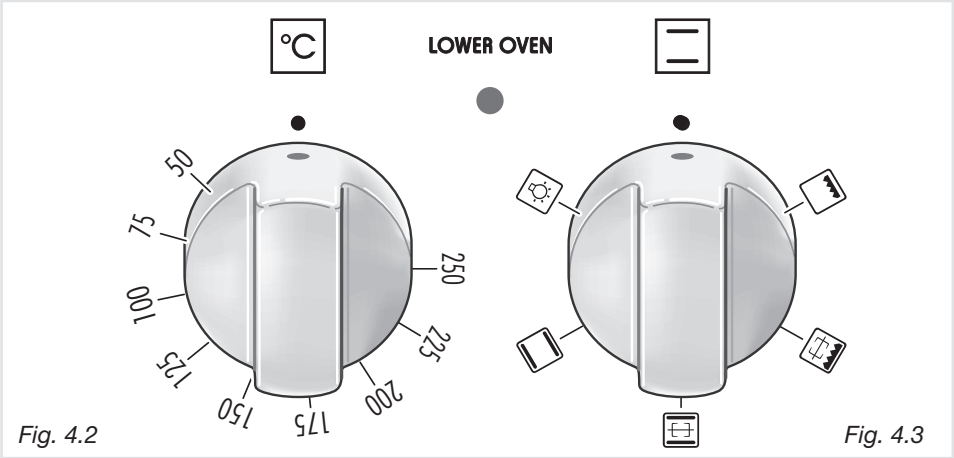


*Fig. 4.2*

*Fig. 4.3*

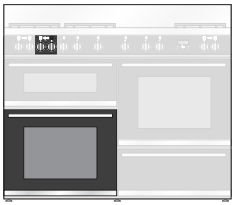

**NOTE:**
Upon first use, it is advisable to operate the oven at the maximum temperature (thermostat knob on position 250) for 60 minutes in the position and for another 15 minutes in the mode in order to eliminate any traces of grease from the electrical resistances.

**WARNING:**
**The door is hot, use the handle.**

**During use the appliance becomes hot. Care should be taken to avoid touching heating elements inside the oven.**

## OPERATING PRINCIPLES

Heating and cooking in the CONVENTIONAL oven are obtained in the following ways:

**a. by normal convection**
The heat is produced by the upper and lower heating elements.

**b. by radiation**
The heat is radiated by the infra red grill element (**use with the oven door closed.**).

## THERMOSTAT KNOB (Fig. 4.2)

This only sets the cooking temperature and does not switch the oven on.
Rotate clockwise until the required temperature is reached (from 50 to 250).

## FUNCTION SELECTOR KNOB (fig. 4.3)

Rotate the knob clockwise to set the oven for one of the following functions:

### OVEN LIGHT

By turning the knob onto this setting we light the oven cavity.
The oven remains alight while any of the functions is on.

### TRADITIONAL CONVECTION COOKING

The upper and lower heating elements are switched on. The heat is diffused by natural convection and the temperature must be regulated between 50° C and 250° C with the thermostat knob.
It is necessary to preheat the oven before introducing the foods to be cooked.

The spit roaster is operated by turning the selector knob in the mode.

***Recommended for:***
For foods which require the same cooking temperature both internally and externally, i. e. roasts, spare ribs, meringue, etc.

## GRILLING

The infra-red heating element is switched on. The heat is diffused by radiation.
Use with the oven door closed and the thermostat knob to **between 50° and 225°C maximum**.
The spit roaster is operated by turning the selector knob in the mode.

For correct use see chapter “USE OF THE GRILL”

***Recommended for:***
Intense grilling action for cooking with a broiler; browning, crisping, “au gratin”, toasting, etc.

**Note: It is recommended that you do not grill for longer than 30 minutes at any one time.**
**Attention: the oven door becomes very hot during operation. Keep children away.**

## USE OF THE GRILL

Set the function selector knob to position and the thermostat knob **between 50°C and 225°C maximum**.
Leave to warm up for approximately 5 minutes with the door closed.

Introduce the food to be cooked, positioning the grill pan as close to the grill as possible.

Insert the drip pan under the rack to collect the cooking juices.

**Always grill with the oven door closed.**

**Grilling with the oven door closed and not for longer than 30 minutes at any one time.**

**Attention: the oven door becomes very hot during operation.**
**Keep children away.**

## OVEN COOKING

Before introducing the food, preheat the oven to the desired temperature.
For a correct preheating operation, it is advisable to remove the tray from the oven and introduce it together with the food, when the oven has reached the desired temperature.
Check the cooking time and turn off the oven 5 minutes before the theoretical time to recuperate the stored heat.

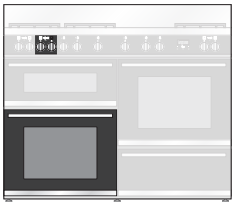

## ROTISSERIE (Fig. 4.4)

The oven is equipped with a rotisserie for cooking on the spit using the grill.

This device is made up of:

– an electrical motor mounted on the rear part of the oven

– stainless steel spit with a removable stay-cool handle and two adjustable sets of prongs

– spit support to be inserted in the central guide of the oven.

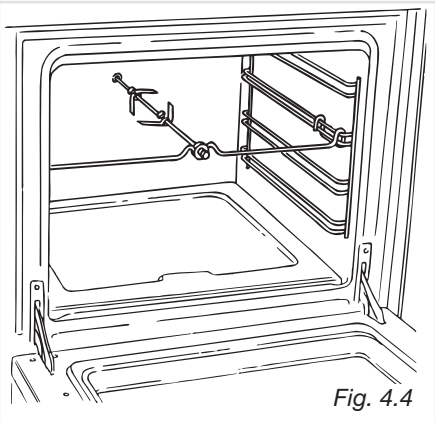

*Fig. 4.4*

## USE OF THE ROTISSERIE (Fig. 4.4)

– Insert the tray into the lowest rack holders of the oven and insert the rod support into the intermediate rack holders.

– Put the meat to be cooked onto the rod, being careful to secure it in the center with the special forks.

– Insert the rod into the motor opening and rest it onto the support of the spit collar; then remove the grip by turning it to the left.

– Fit the heat shield and switch on the grill and turnspit.

The rotation direction of the rotisserie can be either clockwise or counter-clockwise.

**Very important:** the rotisserie must always be used with the oven door closed.

**Attention: the oven door becomes very hot during operation.**

**Keep children away.**

**It is recommended that you do not grill for longer than 30 minutes at any one time.**

# 5 ELECTRICAL CONVECTION OVEN (Top left oven)

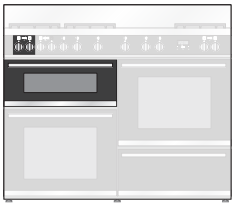

**The glass on the oven door reaches high temperatures during operation.**
**Keep children away.**

## GENERAL FEATURES

The convection oven is equipped with 3 electrical heating elements:

– 2 elements (upper and lower) for normal oven cooking

– 1 grill element, on the top of the oven, for grilling which must be done with the oven door closed.

The input of the elements is:

| | |
|---|---|
| – Upper element, | 700 W |
| – Lower element, | 1000 W |
| – Grill element, | 2000 W |

**NOTE:**

Upon first use, it is advisable to operate the oven at the maximum temperature (thermostat knob on position MAX) for 60 minutes in the position ▭ and for another 15 minutes in the ▭ mode in order to eliminate any traces of grease from the electrical resistances.

**WARNING:**
**The door is hot, use the handle.**

**During use the appliance becomes hot. Care should be taken to avoid touching heating elements inside the oven.**

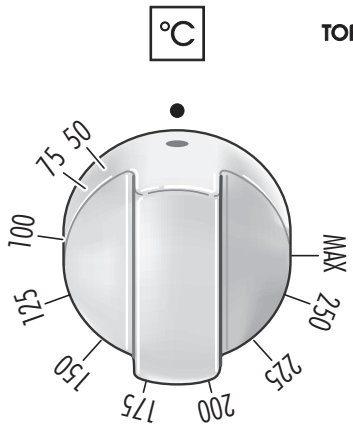


Fig. 5.1

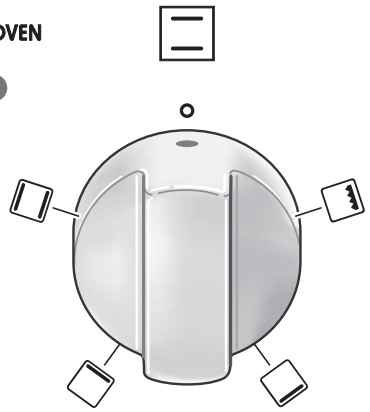


Fig. 5.2

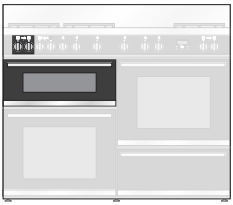

## OPERATING PRINCIPLES

Heating and cooking in the CONVENTIONAL oven are obtained in the following ways:

**a. by normal convection**
The heat is produced by the upper and lower heating elements.

**b. by radiation**
The heat is radiated by the infra red grill element (**use with the oven door closed.**).

## THERMOSTAT KNOB (Fig. 5.1)

This only sets the cooking temperature and does not switch the oven on.
Rotate clockwise until the required temperature is reached (from 50°C to MAX).

## FUNCTION SELECTOR KNOB (Fig. 5.2)

Rotate the knob clockwise to set the oven for one of the following functions.

## OVEN LIGHT

The oven is equipped with a light that illuminates the oven to enable visually controlling the food that is cooking.
This light is controlled by the selector knob (fig. 5.2)
It remains on in all the cooking modes.

### TRADITIONAL CONVECTION COOKING

The upper and lower heating elements are switched on. The heat is diffused by natural convection and the temperature must be regulated **between 50° C and MAX position** with the thermostat knob.
It is necessary to preheat the oven before introducing the foods to be cooked.

***Recommended for:***
For foods which require the same cooking temperature both internally and externally, i. e. roasts, spare ribs, meringue, etc.

### LOWER HEATING ELEMENT

In this position only the lower element is switched on. Heat is distributed by natural convection. The thermostat can be set **between 50 and 150°C**; higher temperatures are not available.

***Recommended for:***
This mode is particularly suitable to complete cooking of dishes that require higher temperature at the bottom.

### UPPER HEATING ELEMENT

In this position only the upper element is switched on. Heat is distributed by natural convection. The thermostat can be set **between 50 and 150°C**; higher temperatures are not available.

***Recommended for:***
This mode is particularly suitable to complete cooking of dishes that require higher temperature at the top.

## GRILLING

The infra-red heating element is switched on. The heat is diffused by radiation.
Use **with the oven door closed** and the thermostat knob to **between 50°C and 200°C**.

For correct use see chapter “USE OF THE GRILL”

Before using the grill, preheat for about five minutes.

**Always grill with the oven door closed and do not use the grill for longer than 30 minutes at any one time.**

**Caution: The oven door becomes very hot during operation.**
**Keep children well out of reach.**

***Recommended for:***
Intense grilling action for cooking with a broiler; browning, crisping, “au gratin”, toasting, etc.

## USE OF THE GRILL

Leave to warm up for approximately 5 minutes **with the door closed**.
Place the food inside positioning the rack as near as possible to the grill.
Insert the drip pan under the rack to collect the cooking juices.

**Grilling with the oven door closed.**

**Grilling with the oven door closed and do not for longer than 30 minutes at any one time.**

**Attention: the oven door becomes very hot during operation.**
**Keep children away.**

## OVEN COOKING

Before introducing the food, preheat the oven to the desired temperature.
For a correct preheating operation, it is advisable to remove the tray from the oven and introduce it together with the food, when the oven has reached the desired temperature.
Check the cooking time and turn off the oven 5 minutes before the theoretical time to recuperate the stored heat.

# 6 CLOCK AND TIMER WITH "TOUCH-CONTROL" KEYS (MULTIFUNCTION MAIN OVEN ONLY)

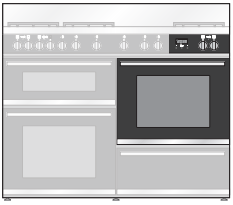

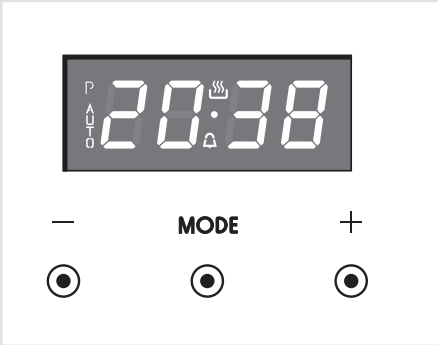


**Keys:**

**+** and **–** Touched simultaneously (for more than 2 seconds):
- setting the clock;
- setting the timer volume (by touching once, along with the "**MODE**" key);
- to cancel automatic cooking at any time.

**MODE** Function selection (touched for more than 2 seconds):
- setting the clock (only after first connection or after a power failure);
- timer;
- automatic cooking "***dur***" (duration) - how long the food will take to cook (by touching the "**MODE**" key again);
- automatic cooking "***End***" - the time you would like the oven turns off (by touching the "**MODE**" key two more times);

**+** Increases the number shown on the display

**–** Decreases the number shown on the display

**Illuminated Symbols:**

**AUTO** ***flashing*** - Automatic cooking completed, oven in automatic position but not set

**AUTO** ***steady illumination*** - Oven set for automatic cooking, cooking still not taking place

" 🔔 " ***flashing*** - Timer being set

" 🔔 " ***steady illumination*** - Timer in operation

" ♨ " ***steady illumination*** - Oven set for manual cooking

" ♨ " and **AUTO** **AUTO** ***flashing*** - Automatic cooking being set

" ♨ " and **AUTO** ***steady illumination*** - Oven set for automatic cooking, cooking taking place.

## “TOUCH-CONTROL” KEYS

The “touch-control” keys shall be operated by the fingers (just by touching the key). When using touch controls it is best to use the ball of your finger rather than the tip.

The keys are automatically deactivated:

- 8 seconds after the last selection; the deactivation is indicated by an acoustic signal (“***beep***”).

To reactivate just touch the “**MODE**” key or the “**+**” and “**–**” keys.

## SETTING THE CLOCK

When first connected, or after a power failure, the digits and “**AUTO**” will shown on the display. To set the clock, touch the “**MODE**“ key, for more than 2 seconds, and then the “**+**” or “**–**” keys.

**Important: The oven does not operate, in manual cooking, without first having set the clock.**

To set the clock, with the appliance already connected, touch the “**+**” and “**–**” keys simultaneously (for more than 2 seconds), then “**+**” or “**–**” keys.

**Important: - changing the time will delete any automatic program;**
**- after setting the clock, the oven starts to operate in the selected function (manual cooking). The “ ♨ ” symbol is steady illuminated.**

## USING THE TIMER

You can use the timer at any time, even when the oven is not in use. The timer does not turn the oven off.
The timer can be set for up to 23 hours and 59 minutes.

- To set the timer, touch the “**MODE**” key for more than 2 seconds (the “🔔” symbol flashes), than the “**+**” or “**–**” keys.
- After about 8 seconds an acoustic signal (“***beep***”) will sound confirming the regulation (“🔔” symbol steady illuminated).
- To check the remaining time touch the “**MODE**“ key for more than 2 seconds. If the remaining time is more than a minute the display will show hours and minutes; if less than a minute the display will show seconds.
- When the time is up, the timer will beep. Touch the “**MODE**” key , for more then 2 seconds, to turn it off; or press the “**+**” or “**–**” key to stop the beep and than the “**MODE**” key, for more than 2 seconds, to deactivate the “🔔” symbol flashing on the display.
- Turn off the oven manually (function and thermostat knobs in the off position) if the manual cooking has been completed.

## SETTING THE TIMER VOLUME

You can select from three volume levels.

- Touch the "**+**" and "**–**" keys simultaneously for more than 2 seconds.
- Touch the "**MODE**" key; you can read on the display the current timer volume ("***ton1***", "***ton2***" or "***ton3***").
- Touch the "**–**" key to listen or change the timer volume.
- Timer volume activated: the last displayed.
- After about 8 seconds an acoustic signal ("***beep***") will sound confirming the volume setting; then the time of day will be displayed.

## AUTOMATIC COOKING

Use automatic cooking to automatically turn the oven on, cook, and then turn the oven off.

1. Check the clock shows the correct time.
2. Select the function and temperature (function and temperature knobs). The oven will come on.
3. Decide how long the food will take to cook, allowing time for preheating if necessary.
4. Touch the "**MODE**" key for more than 2 seconds and then touch again. "***dur***" will show (duration). Using the "**+**" and "**–**" keys, set the stop time.
5. Decide the time you would like the oven to turn off; touch the "**MODE**" key for more than 2 seconds and then touch it two times again. "***End***" will show. Using the "**+**" and "**–**" keys, set the stop time.

**Note:** While "***dur***" is displayed you can change to "***End***" just by touching one time the "**MODE**" key (within 8 seconds from the last selection).

If there is time to wait before cooking starts, the current time of day and "**AUTO**" will show in the clock display. The oven will switch off but is now set for automatic cooking.
If you are already at home to turn the oven on and only want the oven to turn off automatically, start cooking as normal, then follow step 4 or step 5 to set a time to stop the oven.

When automatic cooking starts, "♨" will be displayed and the oven will turn on.

- To see the remaining cook time, follow step 4 up to display "***dur***" (duration).
- To see the set stop time, follow step 5 up to display "***End***".
- To cancel automatic cooking at any time, touch the "**+**" and "**–**" keys simultaneously (for more than 2 seconds) and turn the temperature and function knobs to the off position.

When the stop time is reached, the oven will turn off, the timer will beep and "**AUTO**" will flash:

- Touch any key to stop the beeping.
- Touch the "**MODE**" key, for more than 2 seconds, to return the oven to the manual mode ("♨" symbol steady illuminated on the display).
- Turn the temperature and function knobs to the off position.

**Attention: after a power failure any automatic program is deleted. Turn off the oven manually.**

# 7 CLEANING AND MAINTENANCE

## GENERAL ADVICE

- **Before you begin cleaning, you must ensure that the appliance is disconnected from the electrical power supply.**
- When the appliance is not being used, it is advisable to keep the gas tap closed.
- The periodical lubrication of the gas taps must be done only by specialized personnel.
- If a tap becomes stiff, do not force; contact your local After Sales Service Centre.
- It is advisable to clean when the appliance is cold and especially when cleaning the enamelled parts.
- Avoid leaving alkaline or acidic substances (lemon juice, vinegar, etc.) on the surfaces.
- Avoid using cleaning products with a chlorine or acidic base.
- **Important: The use of suitable protective clothing/gloves is recommended when handling or cleaning of this appliance.**

**WARNING**
**When correctly installed, your product meets all safety requirements laid down for this type of product category. However special care should be taken around the rear or the underneath of the appliance as these areas are not designed or intended to be touched and may contain sharp or rough edges, that may cause injury.**

## ENAMELLED PARTS

All the enamelled parts must be cleaned with a sponge and soapy water or other non-abrasive products.
Dry preferably with a microfibre or soft cloth.
Acidic substances like lemon juice, tomato sauce, vinegar etc. can damage the enamel if left too long.

**Attention! The appliance gets very hot, mainly around the cooking areas. It is very important that children are not left alone in the kitchen when you are cooking.**

**Do not use a steam cleaner because the moisture can get into the appliance thus make it unsafe.**

**Do not use harsh abrasive cleaners or sharp metal scrapers to clean the oven door glass since they can scratch the surface, which may result in shattering of the glass.**

## STAINLESS STEEL, ALUMINIUM PARTS, PAINTED AND SILK-SCREEN PRINTED SURFACES

Clean using an appropriate product.
Always dry thoroughly.

**IMPORTANT:** These parts must be cleaned very carefully to avoid scratching and abrasion. You are advised to use a soft cloth and neutral soap.

**CAUTION: Do not use abrasive substances or non-neutral detergents as these will irreparably damage the surface.**

## CLEANING THE CERAMIC GRIDDLE

– See page 17.

## GAS TAPS

Periodic lubrication of the gas taps must be carried out by specialist personnel only.
In the event of operating faults in the gas taps, call the Service Department.

## INSIDE OF OVENS

The oven should always be cleaned after use when it has cooled down.
The cavity should be cleaned using a mild detergent solution and warm water. Suitable proprietary chemical cleaners may be used after first consulting with the manufacturers recommendations and testing a small sample of the oven cavity. Abrasive cleaning agents or scouring pads/cloths should not be used on the cavity surface.

**NOTE:** The manufacturers of this appliance will accept no responsibility for damage caused by chemical or abrasive cleaning.

**Let the oven cool down and pay special attention no to touch the hot heating elements inside the oven cavity.**

**Do not store flammable material in the ovens.**

## GLASS CONTROL PANEL

Clean using an appropriate product.
Always dry thoroughly.
Do not use harsh abrasive cleaners or sharp metal scrapers to clean the control panel since they can scratch the surface, which may result in shattering of the glass.

## BURNERS AND PAN SUPPORTS

They can be removed and washed with soapy water only.
They will remain always perfect if cleaned with products used for silverware.
After cleaning or wash, check that burner-caps and burner-heads are dry before placing them in the **respective housings**.

It is very important to check that the burner flame distributor and the cap has been correctly positioned - failure to do so can cause serious problems.

**Note: The electrode "S" must be very carefully cleaned. To avoid damage to the electric ignition do not use it when the burners are not in place.**

## CORRECT REPLACEMENT OF THE SEMI-RAPID BURNERS

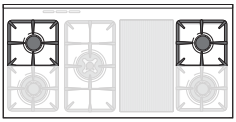

It is very important to check that the burner flame distributor "**F**" and the cap "**C**" has been correctly positioned (see figs. 7.1 - 7.2) - failure to do so can cause a poor burner flame and/or damage to the burner and hob.

Check that the electrode "**S**" (figs. 7.1 - 7.3) is always clean to ensure trouble-free sparking.

Check that the probe "**T**" (figs. 7.1 - 7.3) next to each burner is always clean to ensure correct operation of the safety valves.
**Both the probe and ignition plug must be very carefully cleaned.**

**The burners become very hot during operation. Keep children away.**

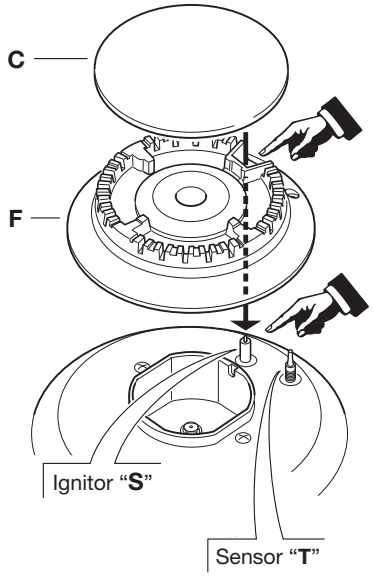


*Fig. 7.1*

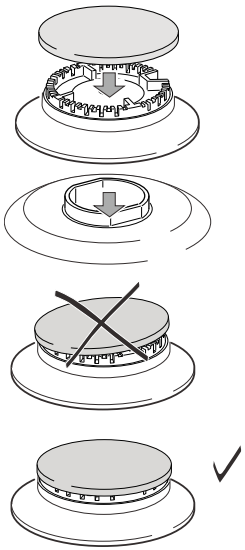

*Fig. 7.2*

## CORRECT REPLACEMENT OF THE TRIPLE RING BURNER

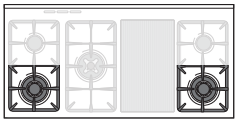

The triple ring burner must be correctly positioned (see fig. 7.5); the burner rib must be enter in their logement as shown by the arrow (see fig. 7.3).

The burner correctly positioned must not rotate (fig. 7.4).

Then position the cap “**A**” and the ring “**B**” (figs. 7.4 - 7.5).

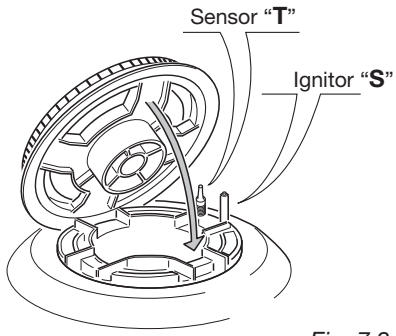


*Fig. 7.3*

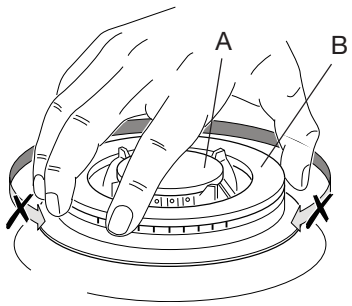


*Fig. 7.4*

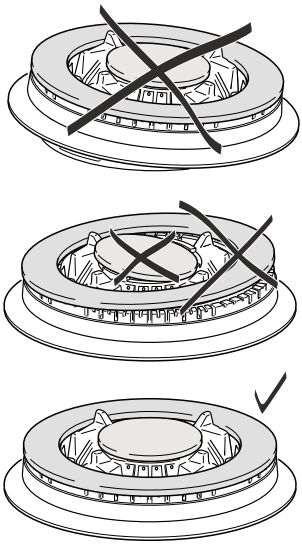

*Fig. 7.5*

## CORRECT POSITION OF DUAL BURNER

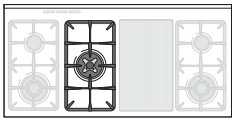

The DUAL burner must be correctly positioned (see fig. 7.6; the burner rib must be fitted as shown by the arrows.
Position the central small cap in its housing as shown by the arrows (fig. 7.7).
Position the big cap in its housing as shown by the arrows (fig. 7.8).

**IMPORTANT:** NEVER unscrew the burner screws (fig. 7.9).

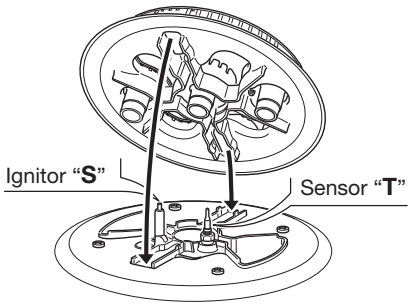


*Fig. 7.6*

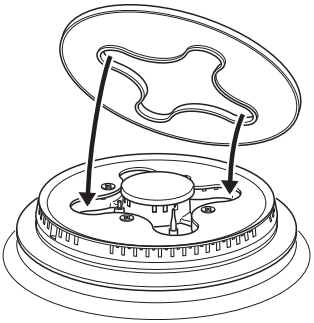

*Fig. 7.8*

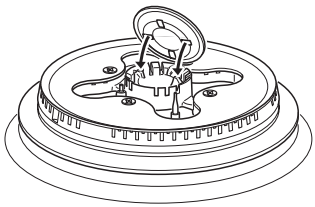

*Fig. 7.7*

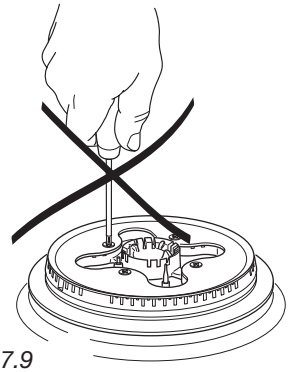

*Fig. 7.9*

## SIDE RUNNER FRAMES

- Assemble the wire racks to the oven walls using the 2 screws (Figs. 7.10-7.11).
- Slide the rack into the runners (Figs. 7.12 - 7.13).
  The rack must be fitted so that the safety notch, which stops it sliding out, faces the inside of the oven; the guard rail shall be at the back.
- To dismantle, operate in reverse order.

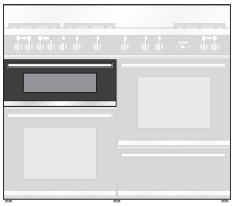

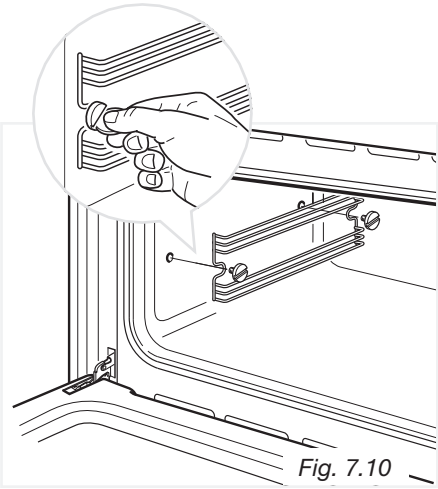

*Fig. 7.10*

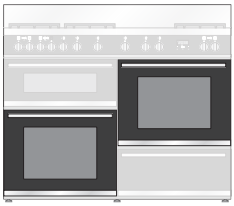

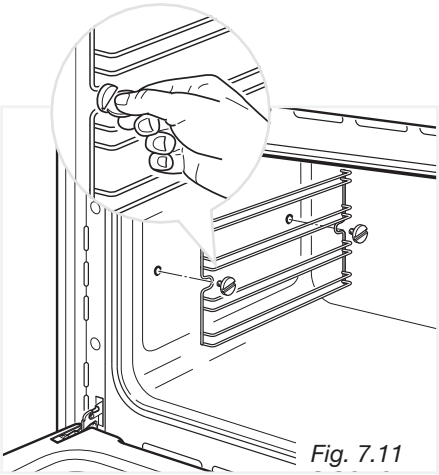

*Fig. 7.11*

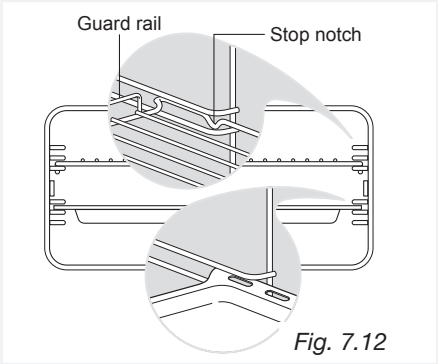


*Fig. 7.12*

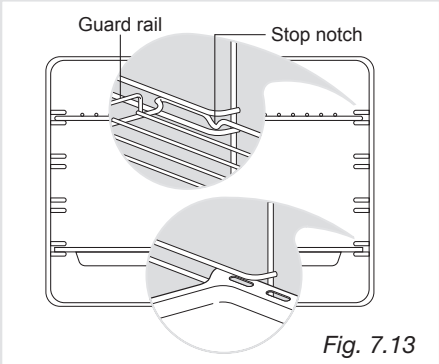


*Fig. 7.13*

## REPLACING THE OVEN LIGHT BULB

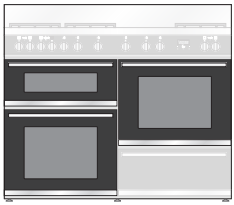

**WARNING: Ensure the appliance is switched off before replacing the lamp to avoid the possibility of electric shock.**

- Let the oven cavity and the heating elements to cool down.
- Switch off the electrical supply.
- Remove the protective cover.
- Unscrew and replace the bulb with a new one suitable for high temperatures (300°C) having the following specifications: 230V or 220-240V, E14 and same power (check watt power as stamped in the bulb itself) of the replaced bulb.
- Refit the protective cover.

**Note:** Oven bulb replacement is not covered by your guarantee.

*Fig. 7.14*

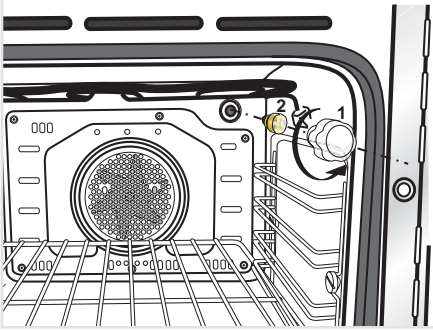

## DRAWER

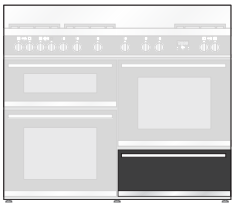

The drawer comes out like a normal drawer.
Do not store flammable material in the ovens or in the drawer.

## REMOVING THE DRAWER (fig. 7.15)

1. Open the drawer completely (fig. 7.15)
2. Move down the lever of left guide (fig. 7.16) and up the lever of right guide (fig. 7.17).
3. Remove the drawer; the levers have to be keep moved (fig. 7.15).

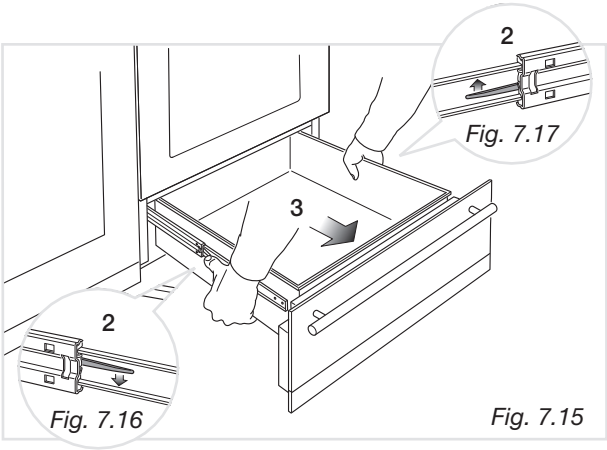


*Fig. 7.17*

*Fig. 7.16*

*Fig. 7.15*

## FITTING THE DRAWER (fig. 7.18)

1. Insert the drawer guides into the range guides (fig. 7.18).
2. Gently close the drawer completely; the safety catchs will be automatically hooked.

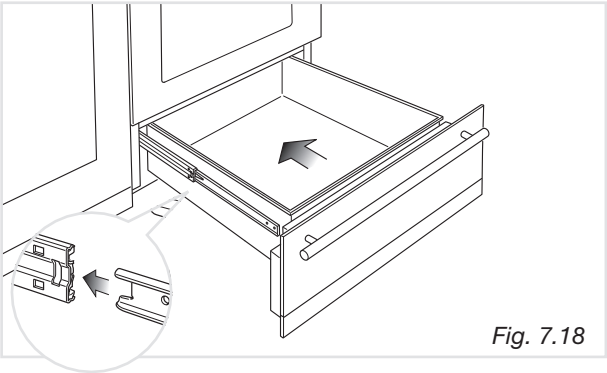

*Fig. 7.18*

# TOP LEFT AND RIGHT OVEN DOORS

## REMOVING THE OVEN DOORS

The oven door can easily be removed as follows:

- Open the door to the full extent (fig. 7.19a).
- Open the lever "**A**" completely on the left and right hinges (fig. 7.19b).
- Hold the door as shown in fig. 7.19.
- Gently close the door (fig. 7.19c) until left and right hinge levers "**A**" are hooked to part "**B**" of the door (fig. 7.19b).
- Withdraw the hinge hooks from their location following arrow "**C**" (fig. 7.19d).
- Rest the door on a soft surface.
- To replace the door, repeat the above steps in reverse order.

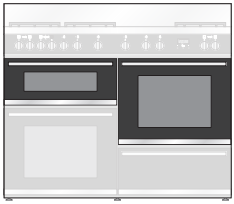

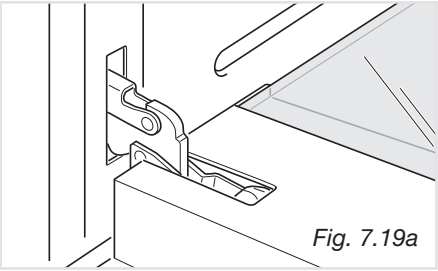

*Fig. 7.19a*

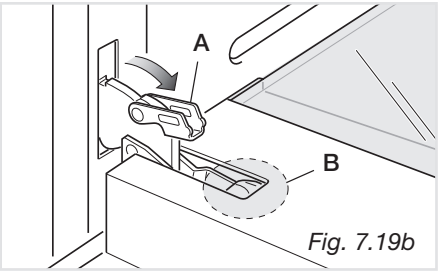


*Fig. 7.19b*

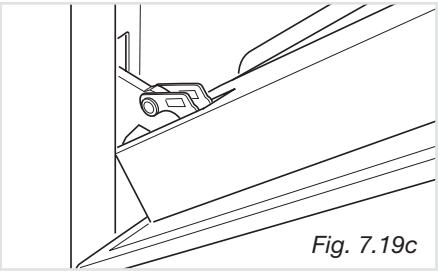

*Fig. 7.19c*

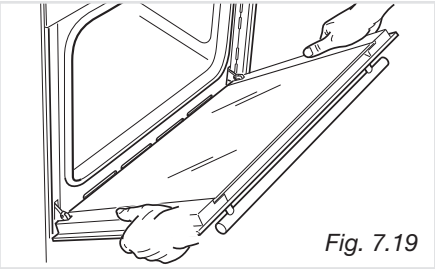

*Fig. 7.19*

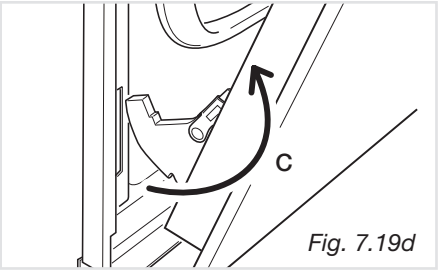


*Fig. 7.19d*

# TOP LEFT AND RIGHT OVEN DOORS

## CLEANING THE PANES OF GLASS

**Do not use harsh abrasive cleaners or sharp metal scrapers to clean the oven door glass since they scratch the surface, which may result in shattering of the glass.**

### Removing the Inner Pane of Glass

The oven door has two panes. To clean these, you need to remove the inner pane.

**1. Lock the door open:**

- Fully open the oven door (fig. 7.20).
- Fully open the lever "**A**" on the left and right hinges (fig 7.21).
- Gently close the door (fig. 7.22) until the left and right hinges are hooked to part "**B**" of the door (fig. 7.21).

**2. Remove the inner pane:**

- **Top right oven door only:** Remove the seal "**G**" by unhooking the three fixing hooks (fig. 7.23).
- Gently pull out the inner pane of glass (fig. 7.24).
- Clean the glass with an appropriate cleaner. Dry thoroughly, and place on a soft surface.

Now you can also clean the inside of the outer glass.

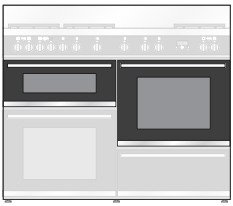

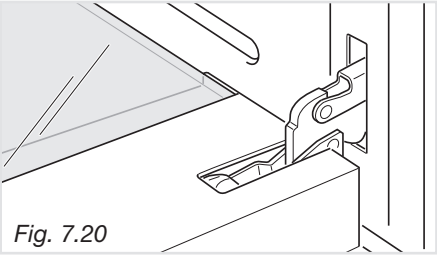

*Fig. 7.20*

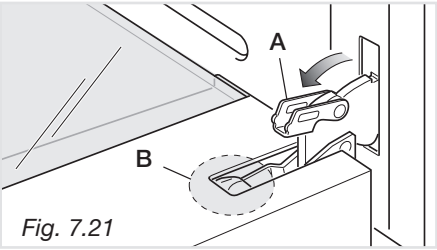


*Fig. 7.21*

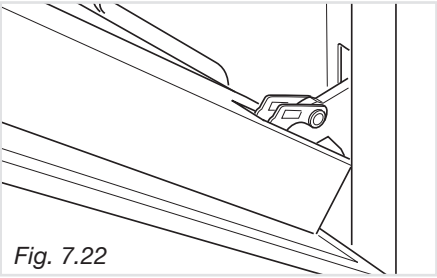

*Fig. 7.22*

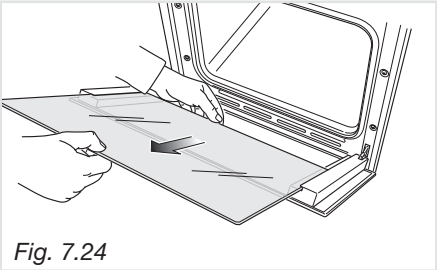

*Fig. 7.24*

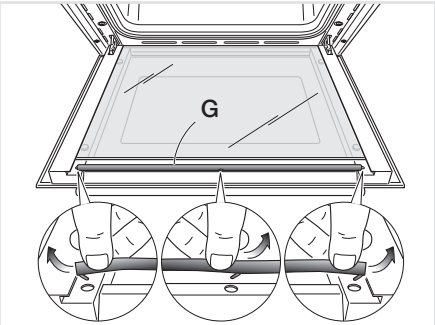


*Fig. 7.23* TOP RIGHT OVEN DOOR ONLY

## REPLACING THE INNER PANE OF GLASS

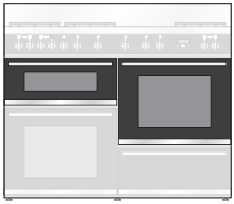

1. **Make sure the door is locked open** (see fig. 7.22).
2. **Replace the inner pane:**
   - Check that the four rubber pads are in place ("**D**" in fig. 7.25).
   - Check that you are holding the pane the correct way. You should be able to read the wording on it as it faces you.
   - Insert the pane in the left "**E**" and right "**F**" slide guides (fig. 7.26), and gently slide it to the retainers "**H**" (fig. 7.27).
   - **Top right oven door only:** Reassemble the seal "**G**" in the correct way (fig. 7.28) by hooking the no. 3 fixing hooks in the proper holes (fig. 7.29).
   - Unlock the oven door by opening it completely and closing the lever "**A**" on the left and right hinges (fig. 7.32).

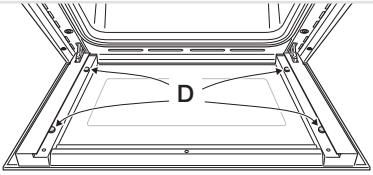


*Fig. 7.25*

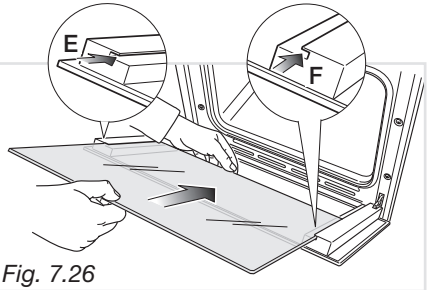


*Fig. 7.26*

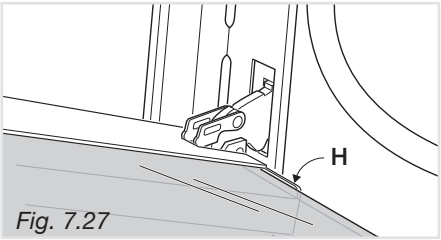


*Fig. 7.27*

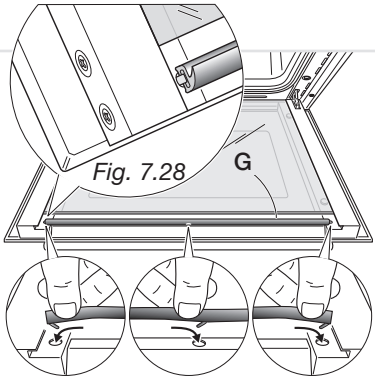


*Fig. 7.28*

*Fig. 7.29* TOP RIGHT OVEN DOOR ONLY

The top right oven door has a sealed gasket in the top part.

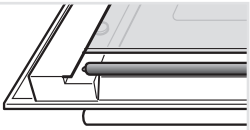

It is normal the opened gap between the top edge of the inner glass and the sealed gasket. This allows the cooling air circulation.

*Fig. 7.30*

The top left oven door has not a sealed gasket in the top part.

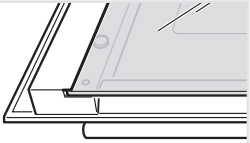

*Fig. 7.31*

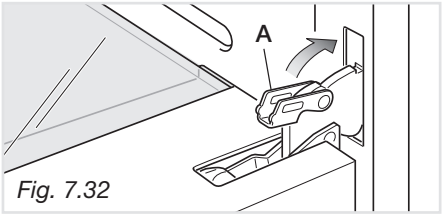


*Fig. 7.32*

## LOWER LEFT OVEN DOOR

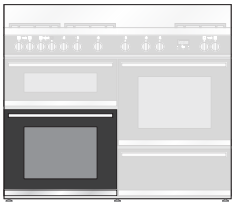

**Note:** The oven door should only be removed by an authorised service agent. Removal of the oven door by a non-authorised person will invalidate the guarantee.

### Removing the Inner Pane of Glass

**When removing and replacing the inner glass, the door should be held still by one person (fig. 7.33). A second person should gently remove the glass (fig. 7.34).**

To clean the inner pane of the oven door on both sides operate as follows:

– Open the oven door.

– Gently pull out the inner pane of glass (fig. 7.34). Forcible removal of the door glass may lead to damage of the door hinges.

– Clean the glass with an appropriate cleaner. Dry thoroughly, and place on a soft surface.

– Now you can also clean the inside of the outer glass.

**Do not use harsh abrasive cleaners or sharp metal scrapers to clean the oven door glass since they scratch the surface, which may result in shattering of the glass.**

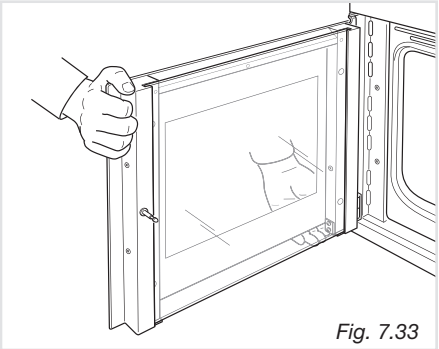

*Fig. 7.33*

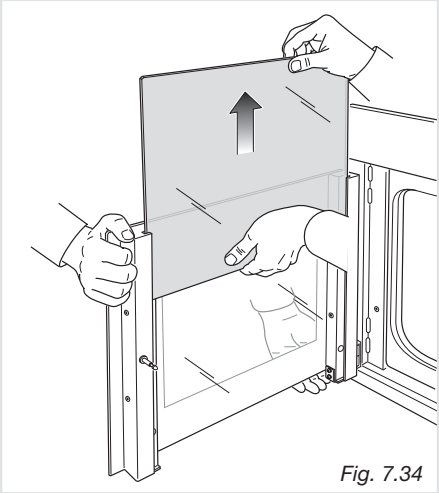

*Fig. 7.34*

## REPLACING THE INNER PANE OF GLASS

To replace the inner pane of the door operate as follows:

– Check that the four rubber pads are in place (“**D**” in fig. 7.35).
– Check that you are holding the pane the correct way. You should be able to read the wording on it as it faces you.
– Whilst one person holds the door still, a second person should insert the inner pane in the left “**E**” and right “**F**” side guides (fig. 7.36) and gently let it slide up to the retainers “**H**” (fig. 7.37). Forcible replacement of the door glass may lead to damage of the door hinges.

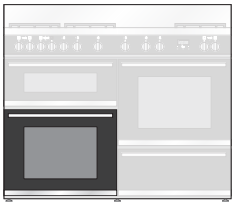

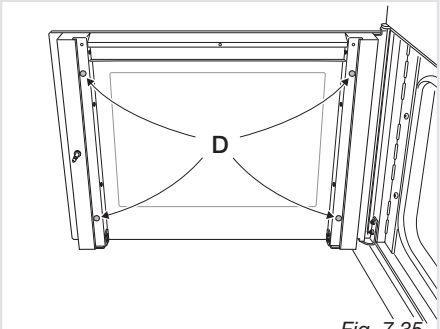

*Fig. 7.35*

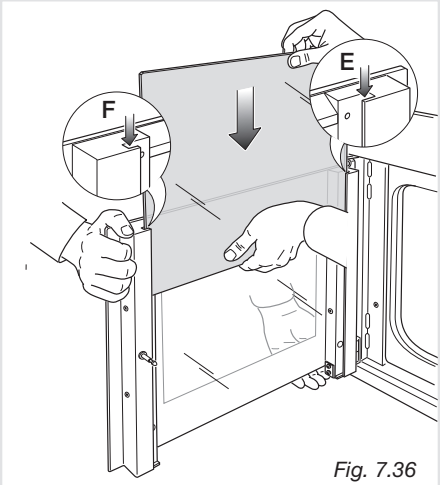

*Fig. 7.36*

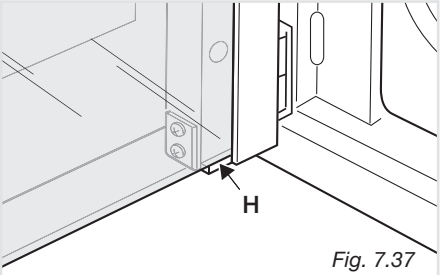

*Fig. 7.37*

# Advice for the installer

## IMPORTANT

– Cooker installation must only be carried out by QUALIFIED TECHNICIANS **and in compliance with local safety standards.** Failure to observe this rule will invalidate the warranty.
The appliance must be installed in compliance with regulations in force in your country and in observation of the manufacturer's instructions.

– Always unplug the appliance before carrying out any maintenance operations or repairs.

– The surfaces of adjacent furniture and walls must be capable of withstanding temperatures in excess of 75°C. If the cooker is installed adjacent to furniture which is higher than the gas hob cooktop, a gap of at least 50 mm must be left between the side of the cooker and the furniture.

– Some appliances are supplied with a protective film on steel and aluminium parts.
**This film must be removed before using the cooker.**

## FOR THE INSTALLER

### Location

This cooker has **class "2/1"** overheating protection so that it can be installed next to a cabinet.

The appliance may be installed in a kitchen, Kitchen/diner or a bed sitting room, but not in a room or space containing a bath or a shower.

The appliance must not be installed in a bed-sitting room of less than 20 $m^3$.

The appliance is designed and approved for domestic use only and should not be installed in a commercial, semi commercial or communal environment.

Your product will not be guaranteed if installed in any of the above environments and could affect any third party or public liability insurances you may have.

The furniture walls adjacent to the cooker must be made of material resistant to heat.

The veneered synthetic material and the glue used must be resistant to a temperature of 90°C in order to avoid ungluing or deformations.

The cooker must be installed by a qualified technician and in compliance with local safety standards.
If the cooker is installed adjacent to furniture which is higher than the gas hob cooktop, a gap of at least 200 mm must be left between the side of the cooker and the furniture.

Curtains must not be fitted immediatly behind appliance or within 500 mm of the sides.

It is essential that the cooker is positioned as stated in fig. 8.1.

If the cooker is located on a pedestal it is necessary to provide safety measures to prevent falling out.

**Note:** please consider the side opening of the bottom left door when installing the cooker.

Once installed you should be able to open the oven door.

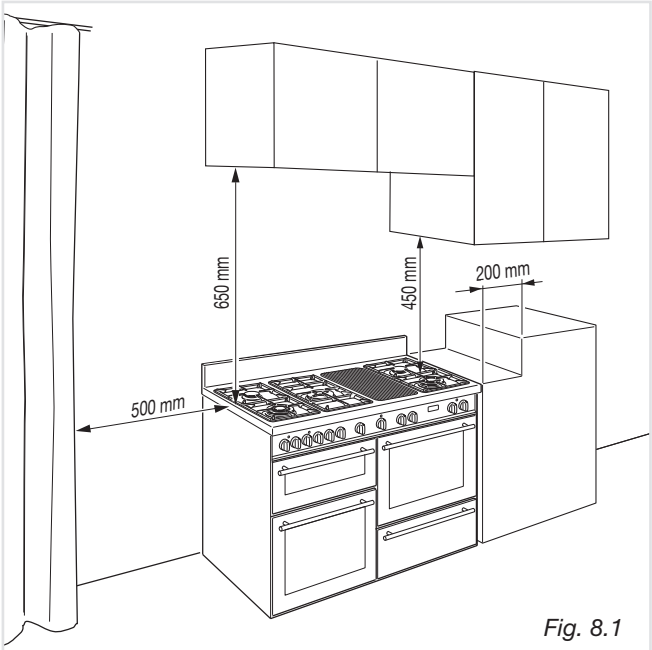

*Fig. 8.1*

Before installing the cooker level the appliance by screwing or unscrewing the four adjustable feet fitted below.

**WARNING!**
For safety reasons unscrew the feet (from screwed position) to the maximum extent of 5 mm (fig. 8.2).

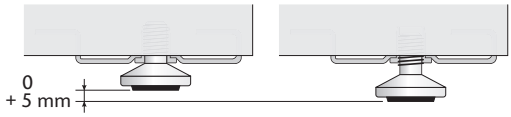


*Fig. 8.2*

## BACKGUARD

- Assemble the backguard as shown in figure 8.3 and fix it by the 5 screws "**A**".
- It is mandatory to install the backguard.

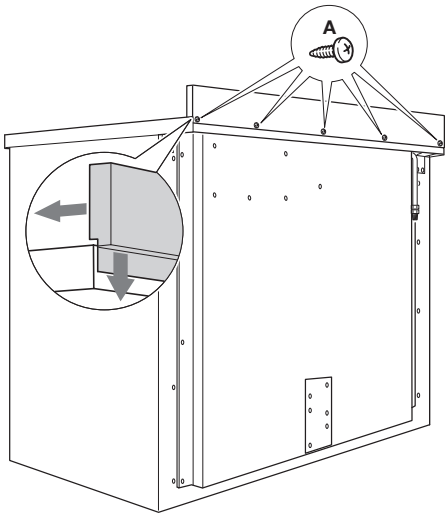


*Fig. 8.3*

# MOVING THE COOKER

**WARNING**
**To move the cooker always ensure two people carry out this manoeuvre to prevent damage to the appliance (fig. 8.4).**

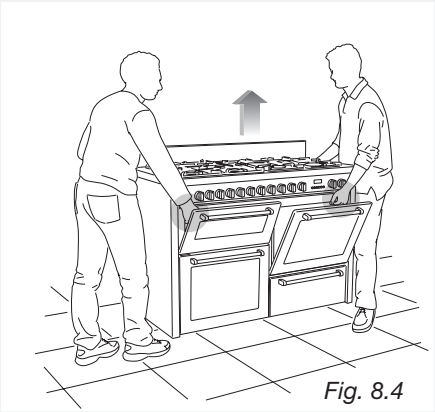
*Fig. 8.4*

**WARNING**
**Be carefull: do not lift the cooker by the door handle (fig. 8.5).**

**WARNING**
When moving cooker to its final position **DO NOT DRAG** (fig. 8.6).
Lift feet clear of floor (fig. 8.4).

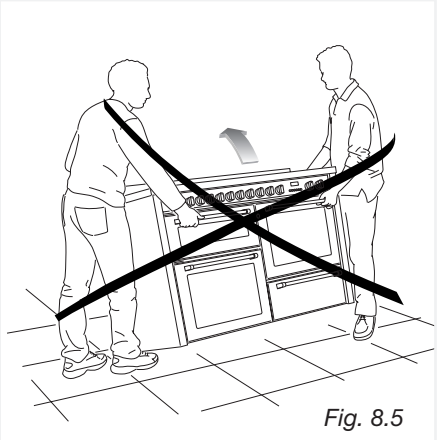
*Fig. 8.5*

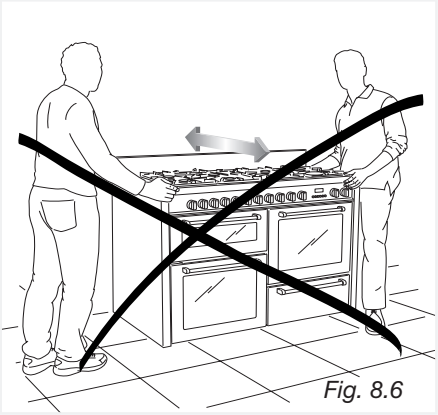
*Fig. 8.6*

## ANTI-TILT BRACKET

**Important!**
**To restrain the appliance and prevent it tipping accidentally, the anti-tilt bracket supplied must be fitted according to the instructions below.**
To fit the anti-tilt bracket:

1. After you have located where the cooker is to be positioned, mark on the wall and on the floor the place where the four screws of the anti-tilt bracket have to be fitted. Please follow the indications given in fig. 8.7.
2. Drill four 8mm diameter holes for the fixing screws (two in the wall and two in the floor- see fig.8.7) and insert the plastic plugs supplied.

   **Important!**
   **Before drilling the holes, check that you will not damage any pipes or electrical wires.**
3. Attach the anti-tilt bracket to the floor and rear wall using the four screws supplied, as shown in fig. 8.7.
4. After attaching the anti-tilt bracket securely, slide the cooker into place. Ensure that the rear right foot slides under the bracket, as shown in fig. 8.7.

   **Attention!**
   **When sliding the cooker into place pay special attention not to trap the power supply cable in the stability bracket.**
   **Pay special attention to the gas connection hose.**

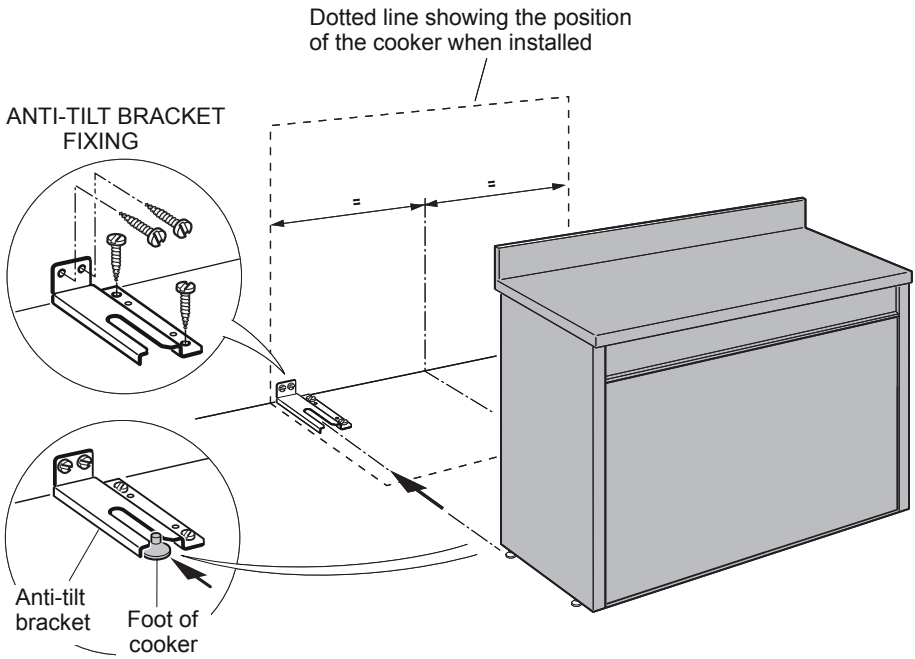


*Fig. 8.7*

## VENTILATION REQUIREMENTS

**The appliance must be installed in compliance with applicable local regulations concerning ventilation and the evacuation of exhaust gases.**
**Intensive and prolonged use may require extra ventilation, e.g. opening a window, or more efficient ventilation increasing the mechanical suction power if this is fitted.**

## CHOOSING SUITABLE SURROUNDINGS

The room where the gas appliance is to be installed must have a natural flow of air so that the gas can burn (in compliance with applicable local regulations).
The flow of air must come directly from one or more openings made in the outside walls with a free area of at least 100 $cm^2$ (or refer to applicable local regulations).
The openings should be near the floor and preferably on the side opposite the exhaust for combustion products and must be so made that they cannot be blocked from either the outside or the outside.
When these openings cannot be made, the necessary air can come from an adjacent room which is ventilated as required, as long as it is not a bed room or a danger area (in compliance with applicable local regulations).
In this case, the kitchen door must allow the passage of the air.

### DISCHARGING PRODUCTS OF COMBUSTION

Extractor hoods connected directly to the outside must be provided, to allow the products of combustion of the gas appliance to be discharged (fig. 8.8).
If this is not possible, an electric fan may be used, attached to the external wall or the window; the fan should have a capacity to circulate air at an hourly rate of 3-5 times the total volume of the kitchen (fig. 8.9).
The fan can only be installed if the room has suitable vents to allow air to enter, as described under the heading “Choosing suitable surroundings”.

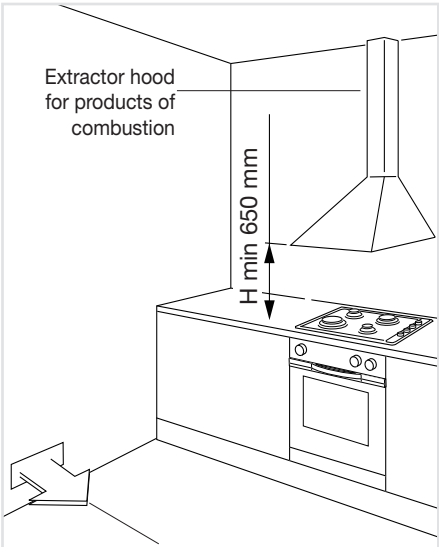

*Fig. 8.8*

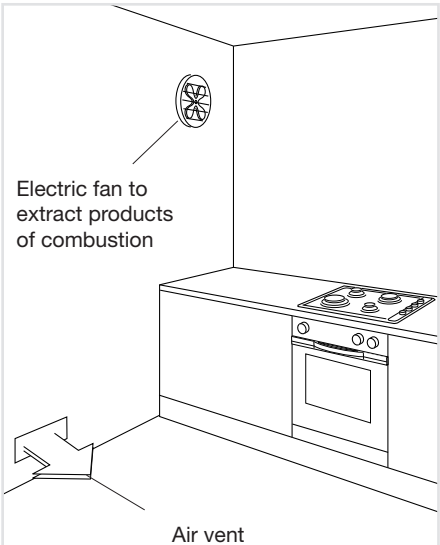

*Fig. 8.9*

# 9 GAS SECTION

## GAS INSTALLATION REQUIREMENTS

### Important !

- **The walls adjacent to the cooker must be of heat-resistant material.**
- **Before installation, make sure that the local distribution conditions (gas type and pressure) and the adjustment of this appliance are compatible. The appliance adjustment conditions are given on the plate or the label.**
- **This appliance must be installed and serviced only by a suitably qualified, registered installer. The installer shall refer to the local standards in force.**
- **Failure to install the appliance correctly could invalidate any manufacturer's warranty.**

This appliance is supplied for use on Natural gas or LPG (check the gas regulation label attached on the appliance).

- Appliances supplied for use on Natural gas: they are adjusted for this gas only and cannot be used on any other gas (LPG) without modification. The appliances are manufactured for conversion to LPG.
- Appliances supplied for use on LPG: they are adjusted for this gas only and cannot be used on any other gas (Natural gas) without modification. The appliances are manufactured for conversion to Natural gas.

If the Natural gas/LPG conversion kit is not supplied with the appliance this kit can be purchased by contacting the After-Sales Service.

### FOR SOUTH AFRICA ONLY

**The appliance is predisposed and adjusted to operate with the gas G30/G31 (LPG USE).**
**Operating pressure: 2,8 kPa.**

This appliance is manufactured for conversion to G20 (NATURAL GAS) if required and is supplied with a conversion kit.
**This appliance must only be connected to NATURAL GAS after a NATURAL GAS conversion kit has been fitted.**

## CONNECTING THE APPLIANCE TO THE GAS SUPPLY

The gas connection must be carried out by an authorised person according to the relevant standards.
Ensure that the room in which the cooker is to be installed is adequately ventilated, in compliance with applicable regulations.

- Connect the cooker to the gas mains utilizing rigid or flexible pipes.
- The gas supply is connected at the rear of the cooker to the terminal of the gas inlet pipe (figs. 9.1a - 9.1b). The connection pipe must not cross the rear of the appliance.
- The gas supply must be connected to the gas inlet which is located at the rear of the appliance as illustrated in the figures 9.1a or 9.1b.
- If the connection pipe cross the cooker, it must be positioned under the cooker rear protection (fig. 9.1a).

*Fig. 9.1a*

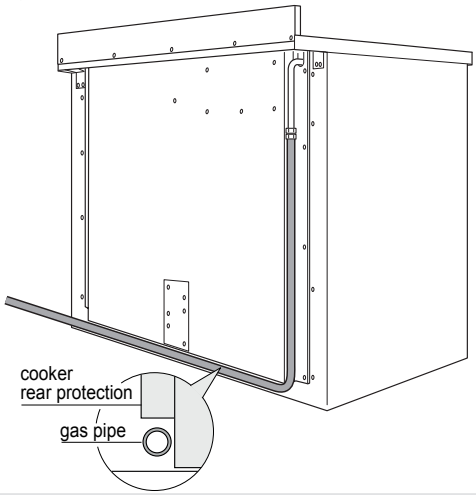


*Fig. 9.1b*

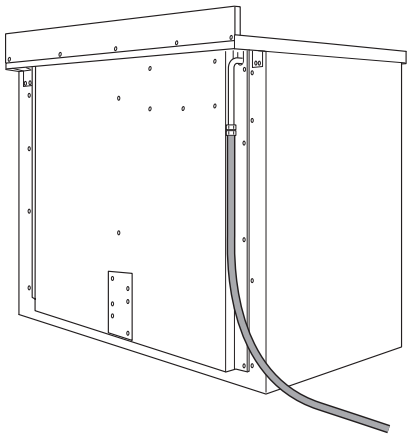

# POSSIBLE GAS CONNECTIONS

## GAS CONNECTION WITH A RUBBER HOSE

### Imporant!

**A rubber hose connection shall only be made if permitted by the applicable local regulations.**

The gas connection is made up of:

- the terminal fitting of the inlet pipe;
- sealing washer;
- the appropriate hose holder (for Natural gas or LPG). If not supplied with the appliance it can be purchased by contacting the After-Sales Service.

**Connecting the cooker to Natural gas**

1. If not already fitted, fit the Natural gas hose holder on the inlet pipe, making sure that you place the sealing washer between them (as shown in fig. 9.2).
2. Connect the cooker to the gas supply using a suitable rubber hose (internal diameter 15 mm).
   **The hose must comply with the applicable local regulations and be of the correct construction for the type of gas being used.**
3. Make sure that the hose is tightly and securely fitted at both ends.
4. Use a standard hose clamp (not supplied) to fasten the hose.

**Connecting the cooker to LPG**

1. If not already fitted, fit the LPG hose holder on the inlet pipe, making sure that you place the sealing washer between them (as shown in fig. 9.2).
2. Connect the cooker to the gas supply using a suitable rubber hose (internal diameter 6 mm).
   **The hose must comply with the applicable local regulations and be of the correct construction for the type of gas being used.**
3. Make sure that the hose is tightly and securely fitted at both ends.
4. Use a standard hose clamp (not supplied) to fasten the hose.
5. Install a gas pressure regulator.

### Important!

**To comply with applicable local regulations, a gas pressure regulator (conforming to the local regulations in force) must be installed when connecting the cooker to an LPG cylinder.**

**When connecting the cooker to the gas supply with a rubber hose, make sure that**

- the hose is as short as possible, without twists or kinks.
- the hose is not longer than 750 mm (or refer to applicable local regulations) and does not come into contact with sharp edges, corners or moving parts. Use a single rubber hose only; never connect the appliance with more than one rubber hose.
- the hose is not under tension, twisted, kinked, or too tightly bent, neither while the appliance is in use nor while it is being connected or disconnected.
- the hose does not come into contact with any part of the cooker with a surface temperature of 70°C or above (or refer to applicable local regulations).
- the hose is not subject to excessive heat by direct exposure to flue products or by contact with hot surfaces.
- the hose can easily be inspected along its entire length to check its condition.

- the hose is replaced at the printed due date or if it shows signs of wear or damage, and replaced regardless of its condition after a maximum of three years.
- you inform the customer that the gas cylinder valve or the gas supply valve immediately by the cooker should be closed when the cooker is not in use.
- you inform the customer that the hose should not be subjected to corrosion by acidic cleaning agents.

**After connecting the cooker to the gas supply, make sure that you**

- check that the connections are correctly sealed using a soapy solution, but never a naked flame.
- check whether the injectors are correct for the type of gas being used. If not, follow the instructions under “GAS MAINTENANCE”.
- replace the sealing washer/s on the slightest sign of deformation or imperfection. The sealing washer/s is/are the part/s which guarantees a good seal in the gas connection.
- use two spanners when fitting the hose holder (fig. 9.2).

**Gas connection with rubber hose holders**

Note: if not already fitted on the inlet pipe, the hose holders are supplied with the product in a separate kit; if not supplied with the appliance they can be purchased by contacting the After-Sales Service.

**(Important: to be used ONLY IF PERMITTED by the local applicable regulations)**

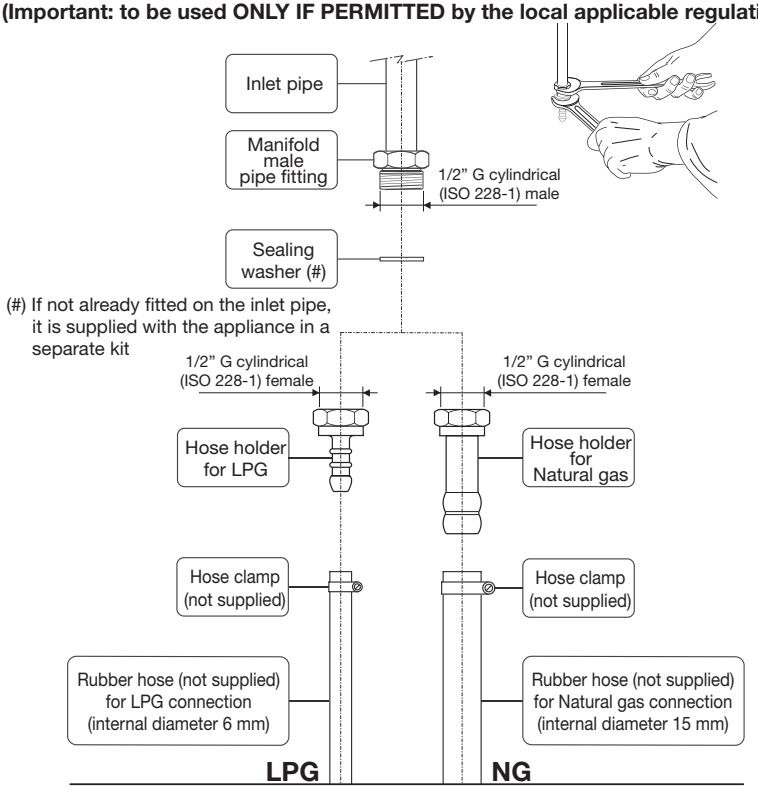


*Fig. 9.2*

## GAS CONNECTION WITH RIGID PIPES OR A FLEXIBLE PIPE

The gas connection is made up of:

- the terminal fitting of the inlet pipe;
- sealing washer.

### Important!

**If fitted, remove the hose holder from the terminal fitting of the inlet pipe.**

**When connecting the cooker to the gas supply with rigid pipes or a flexible pipe, make sure that**

- you use rigid pipes or a flexible pipe complying with applicable local regulations. The flexible pipe shall be of the correct construction for the type of gas being used.
- if compression fittings are used, you tighten them firmly using two spanners (fig. 9.3).
- the connection with rigid metal pipes does not cause stress or pressure to the gas piping.
- the flexible pipe is not under tension, twisted, kinked or too tightly bent, neither while the appliance is in use nor while it is being connected or disconnected.
- the flexiple pipe does not exceed 2000 mm in length (or refer to applicable local regulations) and does not come into contact with sharp edges, corners or moving parts. Use a single flexible pipe only; never connect the cooker with more than one flexible pipe.
- the flexible pipe can easily be inspected along its entire length to check its condition; if it has an expiry date, it should be replaced before that date.
- if using a flexible pipe which is not entirely made of metal, make sure that it does not come into contact with any part of the cooker with a surface temperature of 70°C or above (or refer to applicable local regulations).
- the hose is not subject to excessive heat by direct exposure to flue products or by contact with hot surfaces.
- the rigid or flexible pipe is replaced if it shows signs of wear or damage.
- a gas pressure regulator, in compliance with the applicable local regulations, is installed when connecting to an LPG cylinder.
- you inform the customer that the cylinder valve or the supply valve immediately by the appliance should be closed when the cooker is not in use.
- you inform the customer that the rigid or flexible pipe should not be subjected to corrosion by acidic cleaning agents.

**After connecting the cooker to the gas supply, make sure that you**

- check that the connections are correctly sealed using a soapy solution, but never a naked flame.
- check whether the injectors are correct for the type of gas being used. If not, follow the instructions under “GAS MAINTENANCE”.
- replace the sealing washer/s on the slightest sign of deformation or imperfection. The sealing washer/s is/are the part/s which guarantee/s a good seal in the gas connection.
- use two spanners when connecting the rigid or flexible pipe (fig. 9.3).

**Gas connection with rigid or flexible pipe**

**Note:** if already fitted on the inlet pipe, remove the rubber hose holder

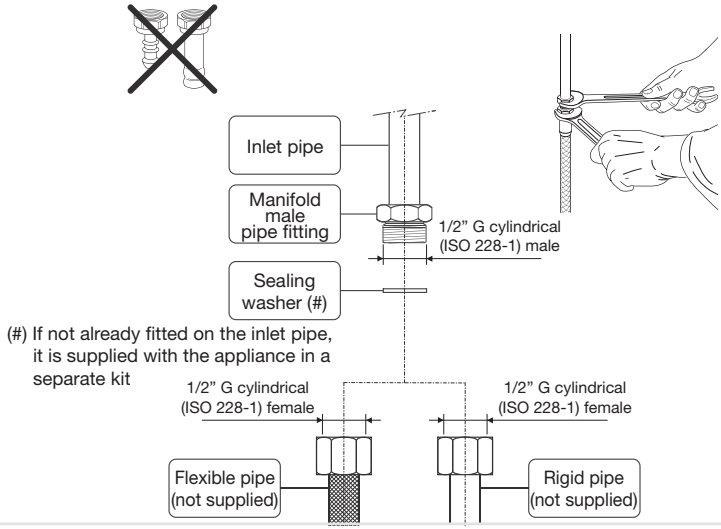


*Fig. 9.3*

# GAS MAINTENANCE

| **TABLE FOR THE CHOICE OF THE INJECTORS** | | | | | **Cat: II 2H3+** |
|---|---|---|---|---|---|
| **Burners** | | Nominal Power kW | Reduced Power kW | G30 - 28-30 mbar<br>G31 - 37 mbar | G20 - 20 mbar |
| | | | | Ø Injector 1/100 mm | Ø Injector 1/100 mm |
| Semi-Rapid (SR) | | 1,75 | 0,45 | 65 | 97 (Z) |
| Triple Ring (TR) | | 3,50 | 1,50 | 95 | 135 (T) |
| Dual (D) | inner crown | 1,00 (*) | 0,32 (*) | 50<br>(no. 1 central) | 69 (F1)<br>(no. 1 central) |
| | outer crown | 4,20 (#) | 1,90 (#) | 62<br>(no. 2 outer) | 95 (Z)<br>(no. 2 outer) |

(*): Power calculated with inner crown operating.

(#): Power calculated with inner and outer crowns operating.

| **INCREASE OF AIR NECESSARY FOR GAS COMBUSTION** (2 $m^3$/h x kW) | |
|---|---|
| **Burners** | Air necessary for combustion ($m^3$/h) |
| Semi-Rapid (SR) | 3,50 |
| Triple Ring (TR) | 7,00 |
| Dual (D) | 8,40 |

## REPLACEMENT OF THE INJECTORS OF THE COOKTOP BURNERS

**If the injectors are not supplied they can be obtained from the "Service Centre".**

Select the injectors to be replaced according to the "**Table for the choice of the injectors**".

To replace the injectors proceed as follows:

- Remove pan supports and burners from the cooktop.
- Using a wrench, substitute the nozzle injectors "**J**" (figs. 9.4, 9.5, 9.6) with those most suitable for the kind of gas for which it is to be used.

**The burners are conceived in such a way so as not to require the regulation of the primary air.**

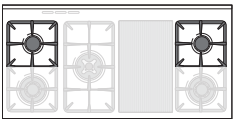

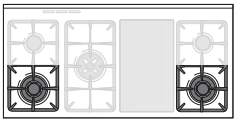

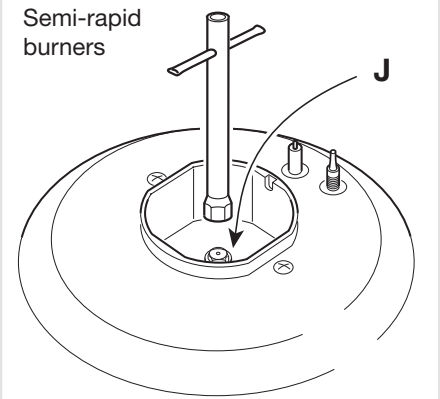


*Fig. 9.4*

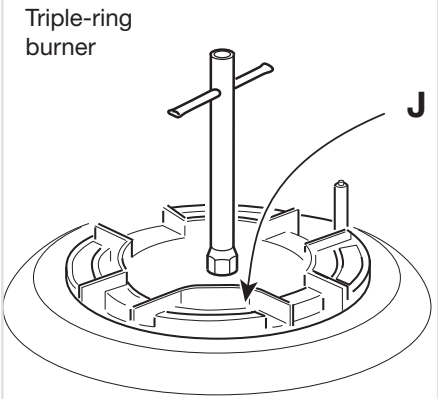


*Fig. 9.5*

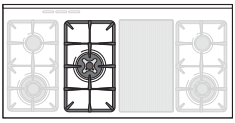

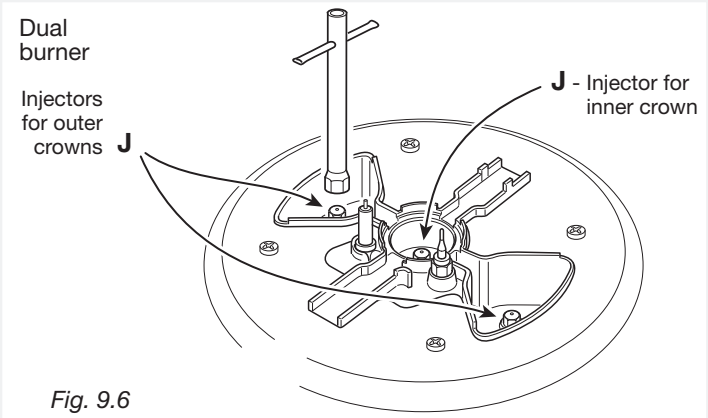


*Fig. 9.6*

## ADJUSTING OF THE MINIMUM OF THE TOP BURNERS

In the minimum position the flame must have a length of about 4 mm and must remain lit even with a quick turn from the maximum position to that of minimum.
The flame adjustment is done in the following way:

**Semi-Rapid and Triple Ring Burners**

– Light the burner
– Set the gas valve to position
– Remove the knob
– With a thin screwdriver turn the screw "**F**" until adjustment is correct (fig. 9.7).

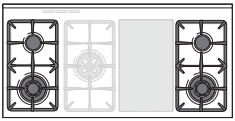

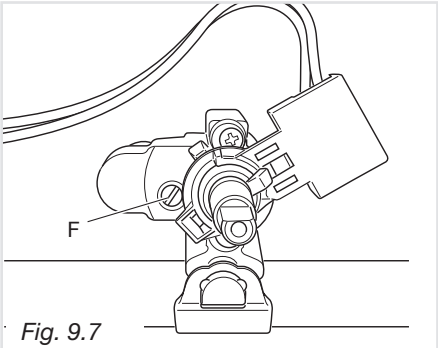


*Fig. 9.7*

**Inside Crown of DUAL Burner**

– Light the DUAL burner
– Set the gas valve to position
– Remove the knob
– Using a screwdriver turn the screw "**H"** until the correct setting is obtained (fig. 9.8).

**Outside crowns of DUAL burner**

– Light the DUAL burner
– Set the gas valve to position
– Remove the knob
– Using a screwdriver turn the screw "**G"** until the correct setting is obtained (fig. 9.8).

**Normally for LPG, tighten up the regulation screw.**

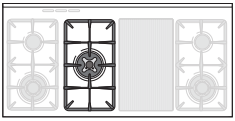

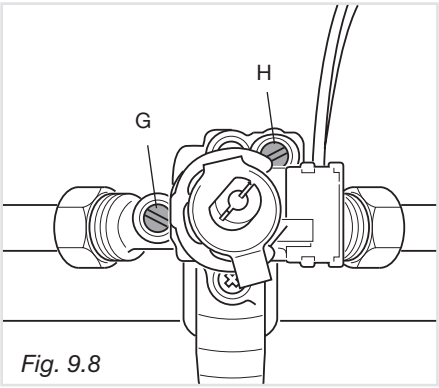


*Fig. 9.8*

## REPLACEMENT OF THE INJECTORS OF LUBRICATION OF THE GAS TAPS

In case of difficulty in the gas taps operation, call Service.

### IMPORTANT

**All intervention regarding installation maintenance of the appliance must be fulfilled with original factory parts.**
**The manufacturer declines any liability resulting from the non-compliance of this obligation.**

# 10 ELECTRICAL SECTION

**IMPORTANT: The cooker must be installed in accordance with the manufacturer's instructions.**
**Incorrect installation, for which the manufacturer accepts no responsibility, may cause damage to persons, animals and things.**

## GENERAL

- Connection to the mains must be carried out by qualified personnel in accordance with current regulations.
- The appliance must be connected to the mains checking that the voltage corresponds to the value given in the rating plate and that the electrical cable sections can withstand the load specified on the plate.
- The appliance can be connected directly to the mains placing an omnipolar switch with minimum opening between the contacts of 3 mm between the appliance and the mains.
- The power supply cable must not touch the hot parts and must be positioned so that it does not exceed 75°C at any point.
- Once the appliance has been installed, the switch or socket must always be accessible.

**N.B. For connection to the mains, do not use adapters, reducers or branching devices as they can cause overheating and burning.**

If the installation requires alterations to the domestic electrical system or if the socket and appliance plug are incompatible, call an expert.
He should also check that the socket cable section is suitable for the power absorbed by the appliance.

**The connection of the appliance to earth is mandatory.**
**The manufacturer declines all responsability for any inconvenience resulting from the inobservance of this condition.**

**Before effecting any intervention on the electrical parts of the appliance, the connection to the network must be interrupted.**

## CONNECTING THE FEEDER CABLE

To connect the feeder cable to the cooker it is necessary to:

- Remove the 6 screws that hold shield "**A**" behind the cooker.
- Open completely the cable clamp "**D**".
- Position the **U** bolts onto terminal block "**B**" (fig. 10.1) according to the diagram in fig. 10.2 and fig. 10.3.
- Insert the feeder cable into the cable save "**P**". The supply cable must be of a suitable size for the current requirements of the appliance; see the section "Feeder cable section".
- Connect the phase and earth cables to terminal "**B**" according to figures 10.2 and 10.3.
- Pull the feeder cable and block it with the cable clamp "**D**"
- Re-mount shield "**A**".

**N.B. The earth conductor must be left about 3 cm longer than the others.**

## FEEDER CABLE SECTION "TYPE H05RR-F"

230 V ∼ 3 x 4 mm² (*) (**)

(**) Connection with wall box connection.
(*) Diversity factor applied

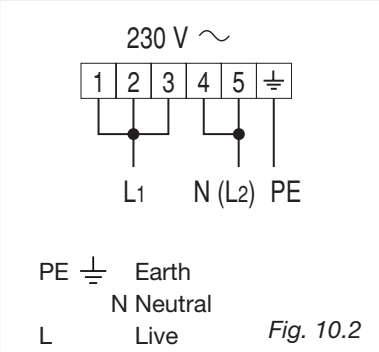

*Fig. 10.2*

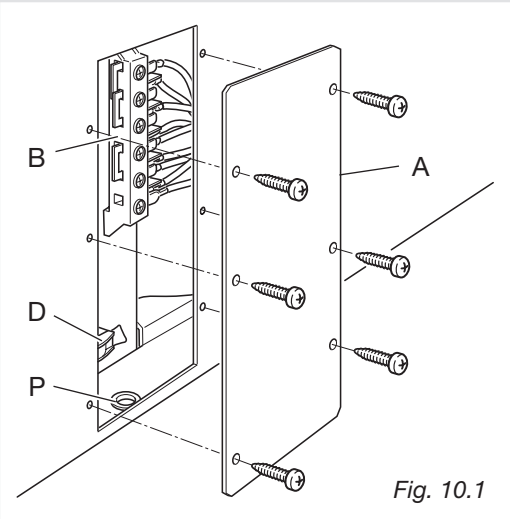

*Fig. 10.1*

*Fig. 10.3*

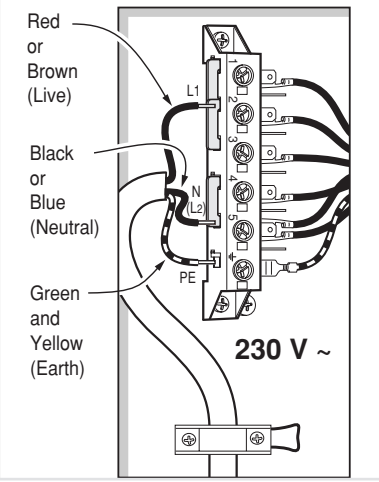

The manufacturer cannot be held responsible for possible inaccuracies due to printing or transcription errors in the present booklet.
The manufacturer reserves the right to make all modifications to its products deemed necessary for manufacture or commercial reasons at any moment and without prior notice, without jeopardising the essential functional and safety characteristics of the appliances.

www.elba-cookers.it

ELBA
HOME APPLIANCES
Made in Italy

Cod. 1104674 - ß1